D Accessories for Gates and Doors

Product catalogue

Hardware for sliding doors and gates

NIKO ®

NIKO ... Quality in Motion

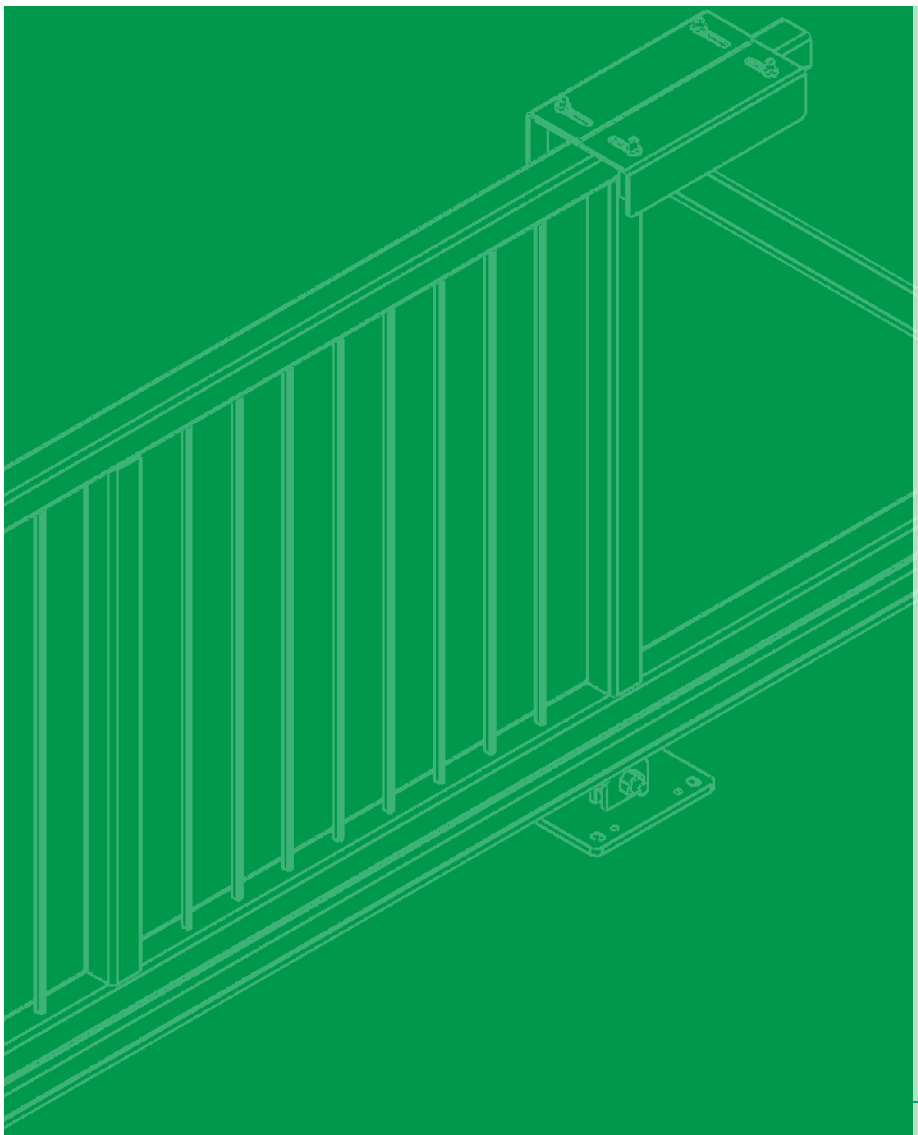

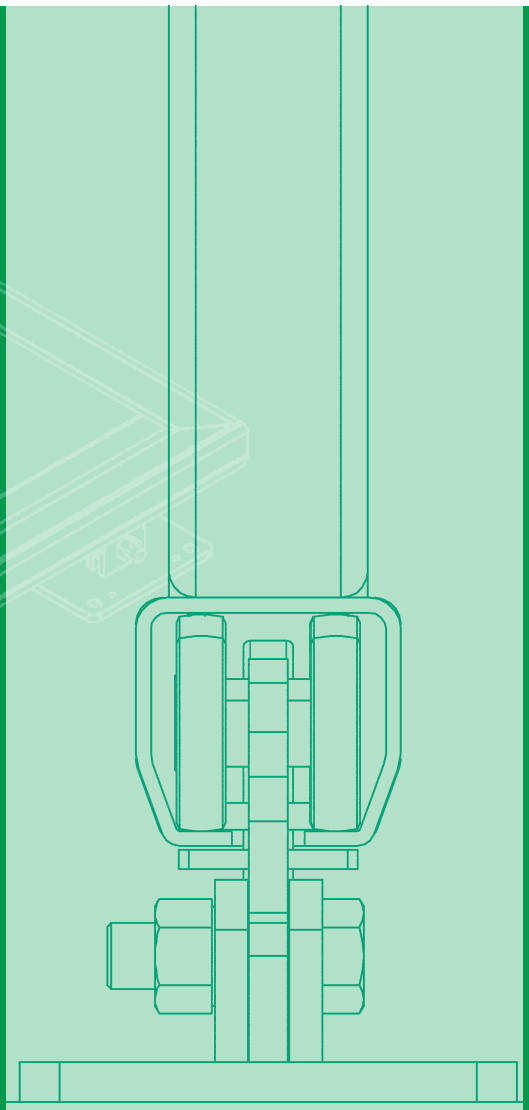

www.niko.eu.com

Global

LOCATIONS & HEAD OFFICE

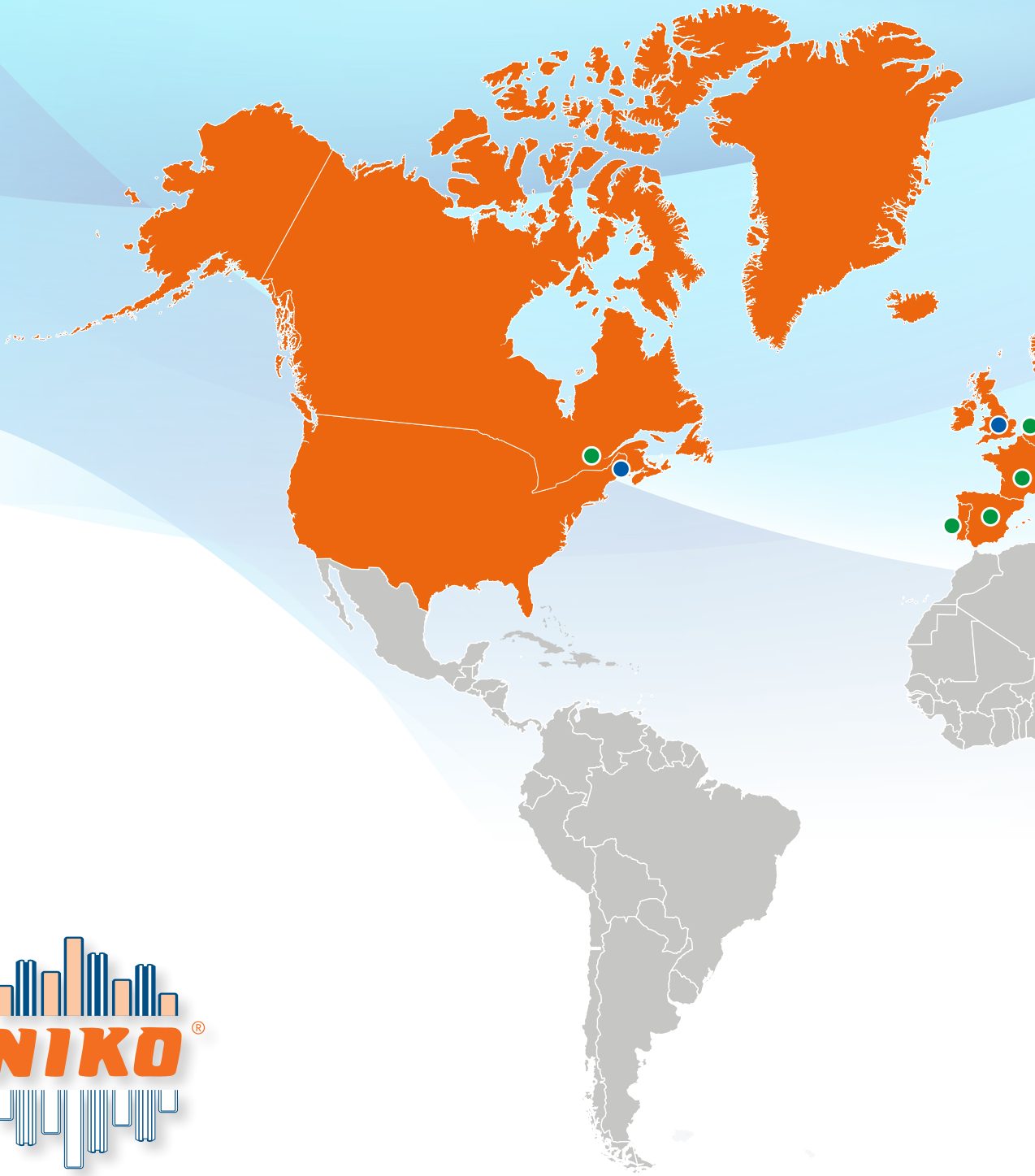

We reserve the right for technical amendments without obligation.
The product pictures and drawings depicted in this catalogue do not always reflect all available sizes.

Ver. December 2023

NIKO currently has a direct presence at seven locations (Greece, Germany, Austria, United Kingdom, Poland, China and U.S.A.), and indirectly through representatives and agents in most European countries, North Africa, Asia and Australia.

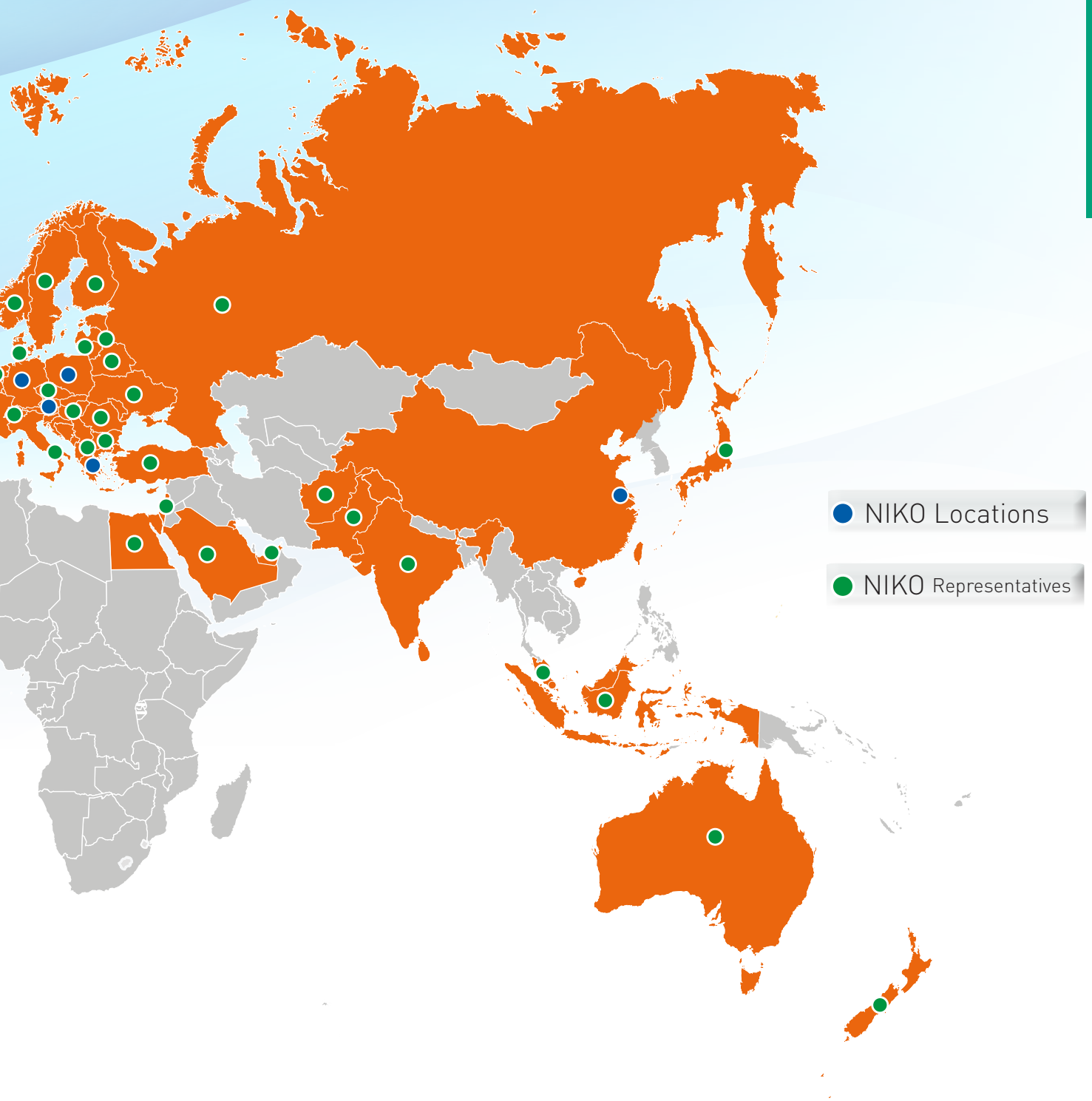

We reserve the right for technical amendments without obligation.
The product pictures and drawings depicted in this catalogue do not always reflect all available sizes.

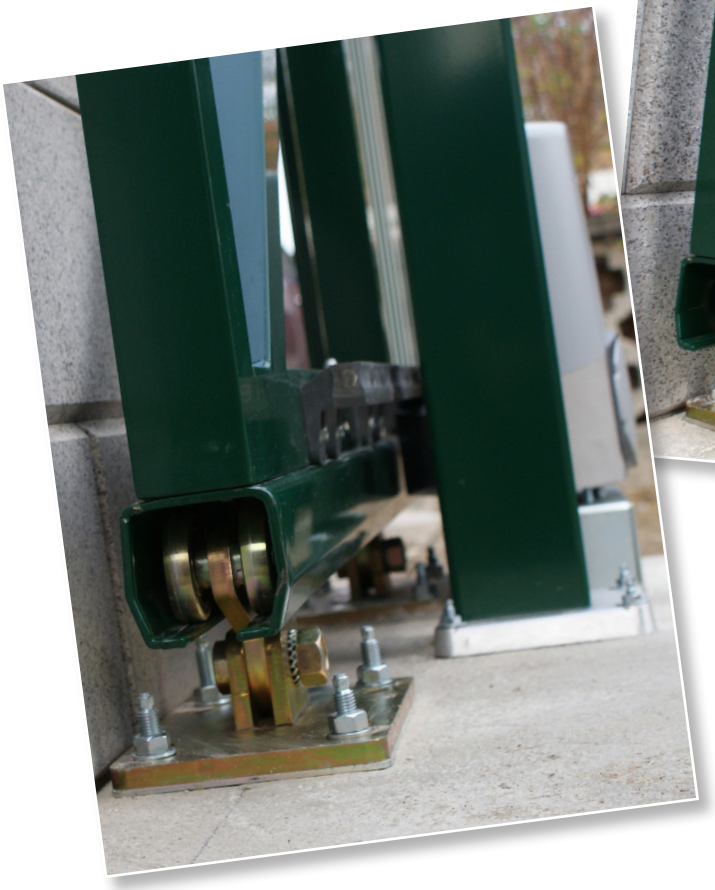

We reserve the right for technical amendments without obligation.
The product pictures and drawings depicted in this catalogue do
not always reflect all available sizes.

Contents

Introduction - Application examples	Page	6-10
Component specifications	Page	11-41
Track profiles	Page	11
Cantilever fittings	Page	12-14
Guides	Page	15-18
Door latches	Page	19
Double acting door hinges	Page	20
Locking latches for folding doors	Page	21
Catch lock and door buffer with spring	Page	22
Spring door holders	Page	23
Gate hinges, stainless steel	Page	24-25
Gate hinges, steel / gate latches	Page	26-29
Flush handles and gate handles	Page	30
Steel bottom rollers with one bearing	Page	31-34
Roller for wire rope	Page	34
Steel bottom rollers with two bearings	Page	35-38
Stainless steel sliding gate fittings	Page	39-43
Technical information for cantilever gate fittings	Page	44-45
Index	Page	46

We reserve the right for technical amendments without obligation.
The product pictures and drawings depicted in this catalogue do not always reflect all available sizes.

We constantly control our internal production processes through the **NIKO quality assurance**.

With more than **50 years experience** in the production of fittings, close contact to our suppliers and customers, combined with continuous development of our products, **we offer you the necessary lead for the equipment of your sliding door and sliding gates systems**.

This is our guiding principle. **NIKO QUALITY IN MOTION**

We reserve the right for technical amendments without obligation.
The product pictures and drawings depicted in this catalogue do not always reflect all available sizes.

Ver. December 2023

We reserve the right for technical amendments without obligation.
The product pictures and drawings depicted in this catalogue do not always reflect all available sizes.

Application examples

Cantilever sliding gate

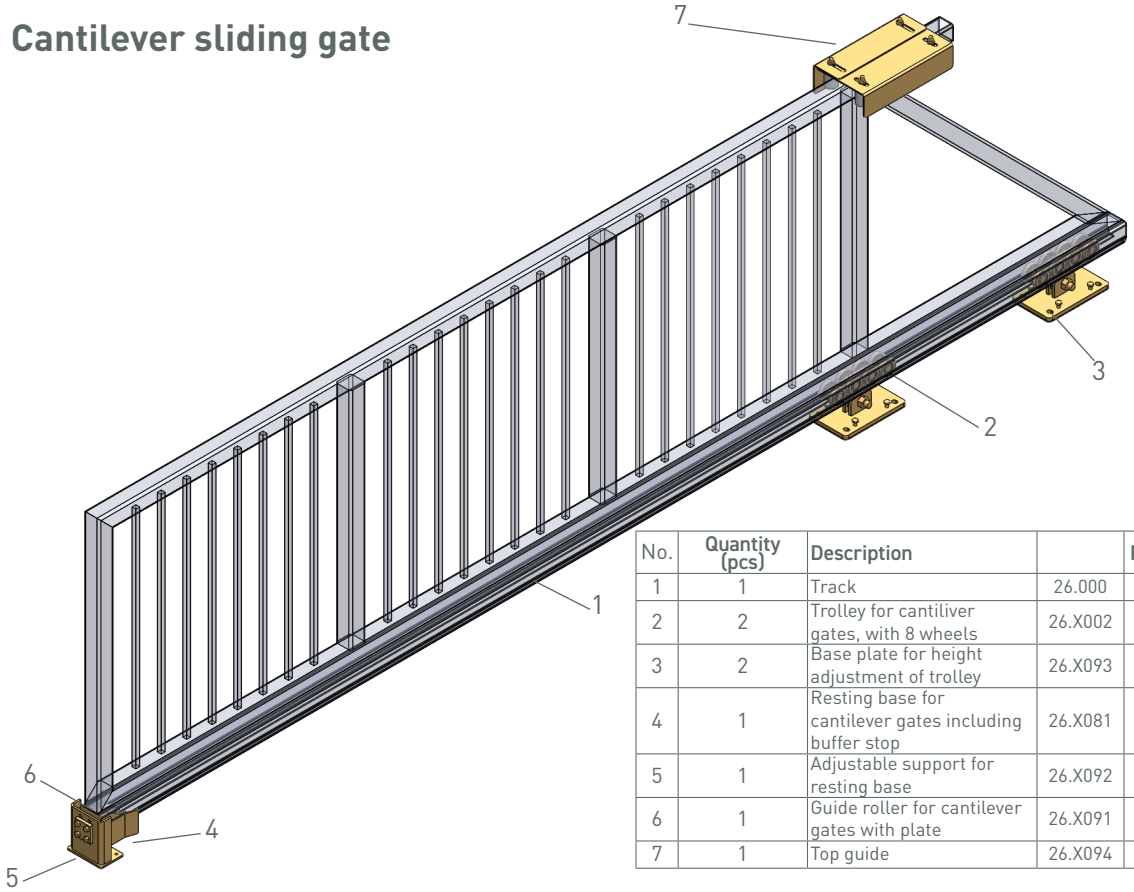

No.	Quantity (pcs)	Description		Page
1	1	Track	26.000	11
2	2	Trolley for cantiliver gates, with 8 wheels	26.X002	12
3	2	Base plate for height adjustment of trolley	26.X093	13
4	1	Resting base for cantilever gates including buffer stop	26.X081	13
5	1	Adjustable support for resting base	26.X092	14
6	1	Guide roller for cantilever gates with plate	26.X091	14
7	1	Top guide	26.X094	15

No 1

Sliding gate with steel bottom rollers

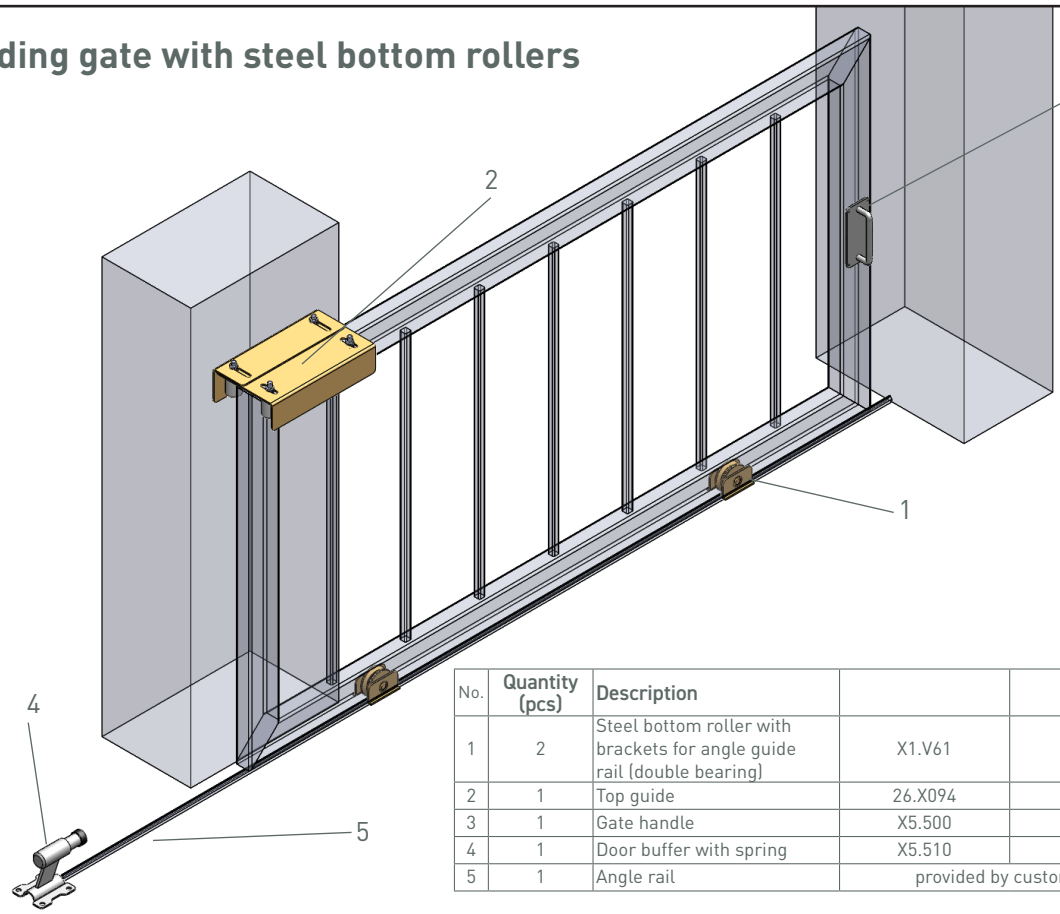

No.	Quantity (pcs)	Description		Page
1	2	Steel bottom roller with brackets for angle guide rail (double bearing)	X1.V61	35
2	1	Top guide	26.X094	15
3	1	Gate handle	X5.500	30
4	1	Door buffer with spring	X5.510	22
5	1	Angle rail	provided by customer	

No 2

We reserve the right for technical amendments without obligation. The product pictures and drawings depicted in this catalogue do not always reflect all available sizes.

Application examples

Swing door, with two panels (one for opening, one for standing), and fittings for door latch

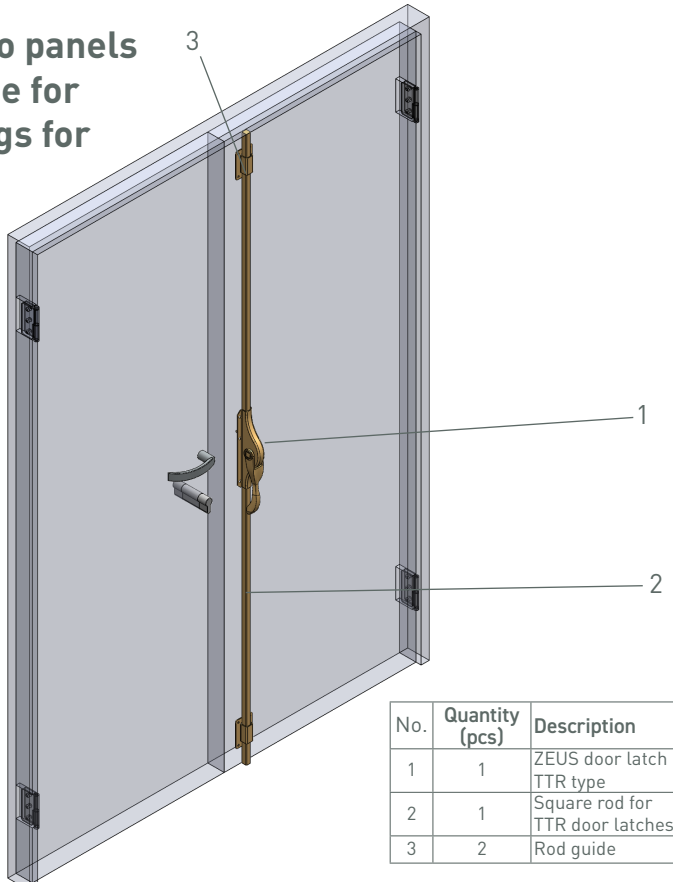

No.	Quantity (pcs)	Description		Page
1	1	ZEUS door latch TTR type	TTR.10	19
2	1	Square rod for TTR door latches	T.2062	19
3	2	Rod guide	T.2036	19

No 3

Folding door with fittings for locking latch

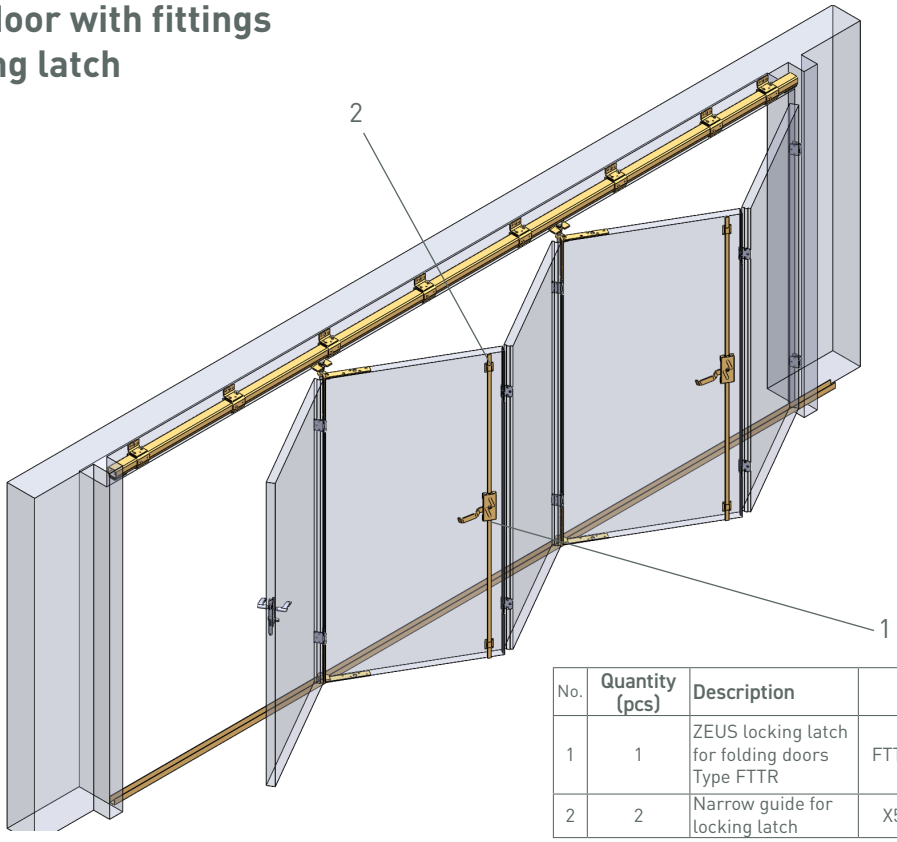

No.	Quantity (pcs)	Description		Page
1	1	ZEUS locking latch for folding doors Type FTTR	FTTR.160	21
2	2	Narrow guide for locking latch	X5.S25	21

No 4

We reserve the right for technical amendments without obligation.
The product pictures and drawings depicted in this catalogue do not always reflect all available sizes.

Application examples

Swing gate, with two panels and pedestrian gate

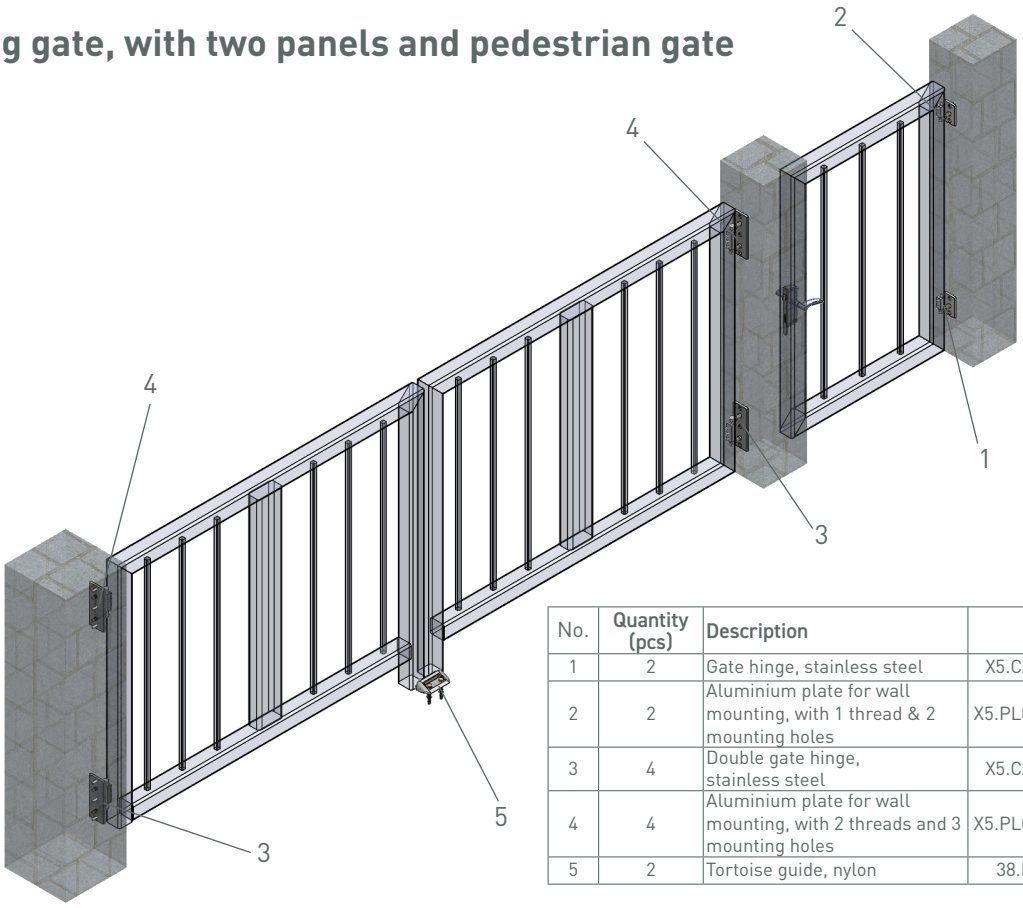

No.	Quantity (pcs)	Description		Page
1	2	Gate hinge, stainless steel	X5.CA100	24
2	2	Aluminium plate for wall mounting, with 1 thread & 2 mounting holes	X5.PL0610N	24
3	4	Double gate hinge, stainless steel	X5.CA200	25
4	4	Aluminium plate for wall mounting, with 2 threads and 3 mounting holes	X5.PL0821N	25
5	2	Tortoise guide, nylon	38.E18	18

No 5

We reserve the right for technical amendments without obligation.
The product pictures and drawings depicted in this catalogue do not always reflect all available sizes.

Component Specifications

NIKO Track profiles

Surface steel plain or zinc plated. Steel Type S235JR according to EN10025. The profile 25.000 is also available in stainless steel.

STAINLESS STEEL 304

NIKO Profil No.	Dimensions			
	h (mm)	b (mm)	d (mm)	s (mm)
25.000	60,00	65,00	18,00	3,60
25.050 Stainless steel (304/A2)	60,00	65,00	18,00	3,60
26.000	75,00	80,00	22,00	4,50
27.000	110,00	90,00	25,00	6,50

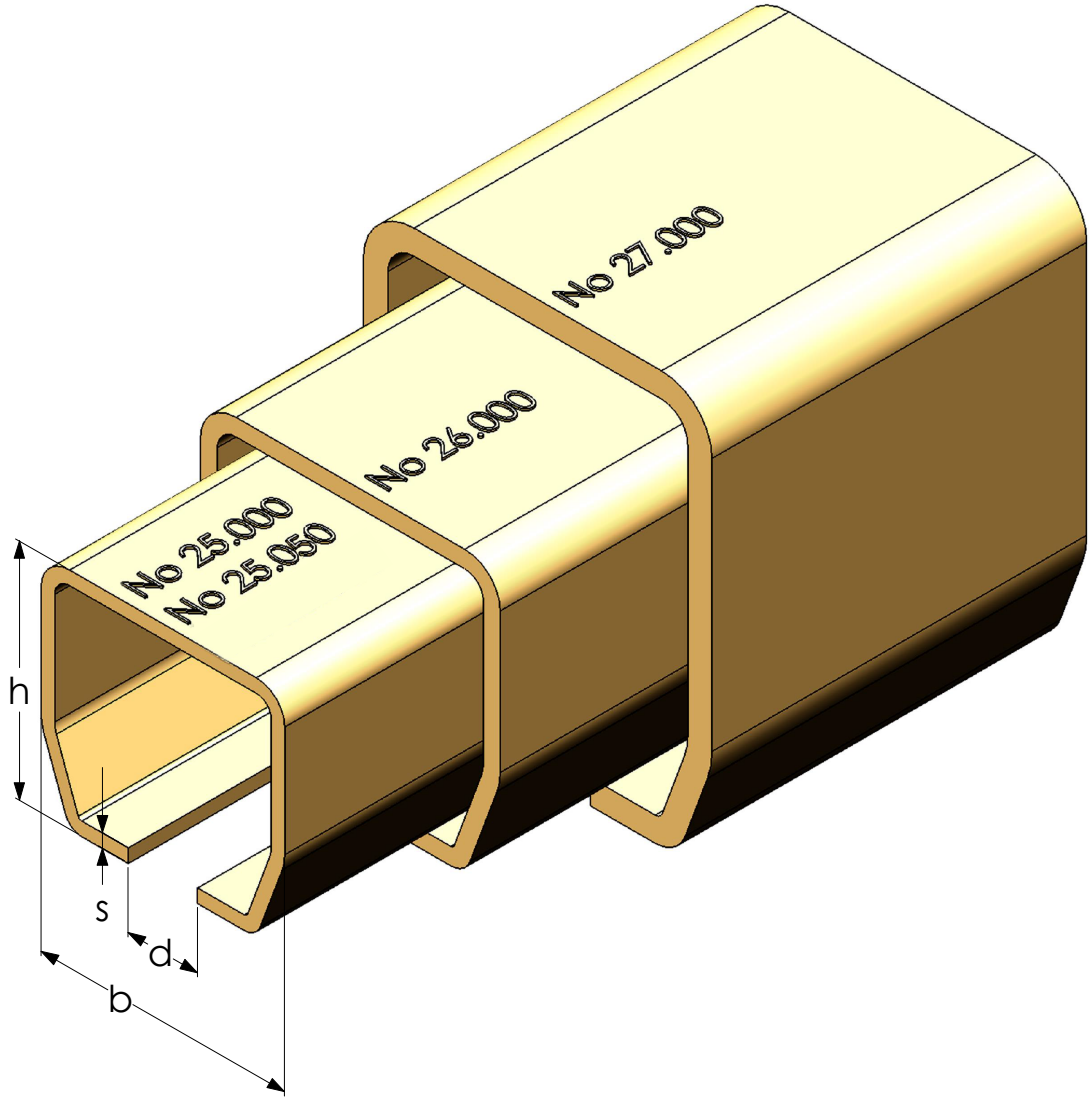

We reserve the right for technical amendments without obligation. The product pictures and drawings depicted in this catalogue do not always reflect all available sizes.

Trolley for cantilever gates, with 8 wheels — Type .X002

Minimal tilting effect through precise wheel guidance. High load capacity for professional applications for intensive operation. Available in zinc plated.

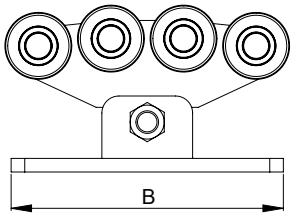

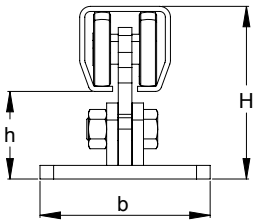

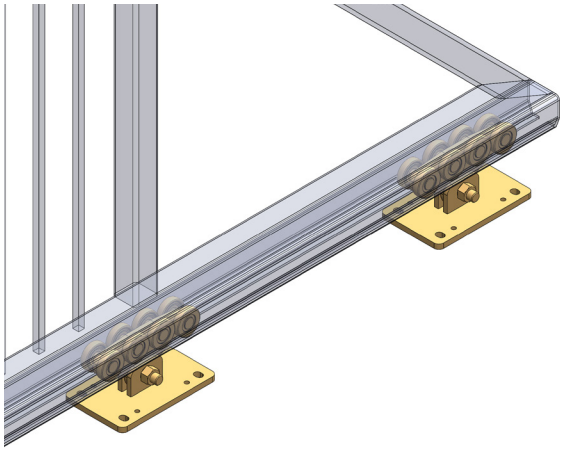

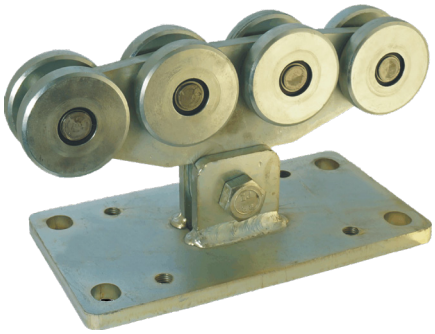

NIKO Profile No.	25.000	26.000	27.000
Part No.	25.X002	26.X002	27.X002
Dimension B (mm)	170	240	330
Dimension H (mm)	144	151	207
Dimension b (mm)	110	150	180
Dimension h (mm)	84	76	97

Trolley for cantilever gates, with 4 wheels & horizontal wheel — Type .X012

Adjustable tilting effect by adjustable support plate. Optimal loading capacity for residential use. Available in zinc plated.

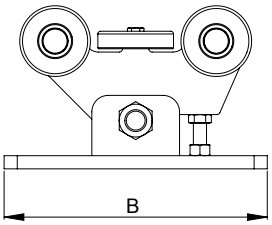

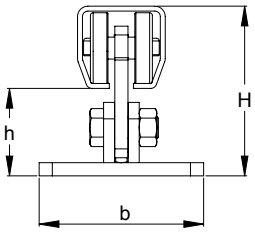

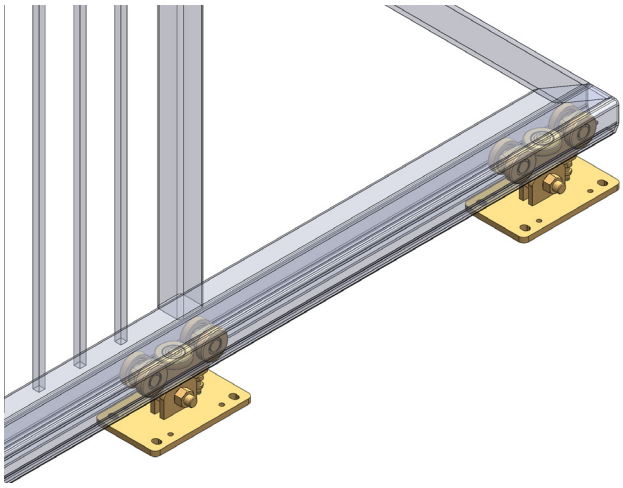

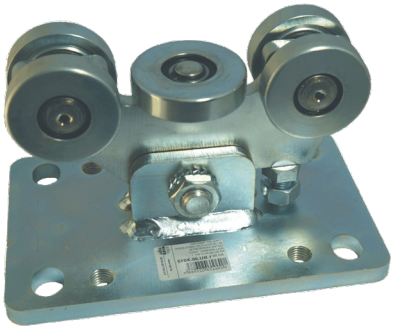

NIKO Profile No.	25.000	26.000
Part No.	25.X012	26.X012
Dimension B (mm)	170	240
Dimension H (mm)	122	155
Dimension b (mm)	110	150
Dimension h (mm)	62	80

We reserve the right for technical amendments without obligation. The product pictures and drawings depicted in this catalogue do not always reflect all available sizes.

Base plate for height adjustment of trolley

Type .X093

Zinc plated plate for trolleys Type .X002/.X012, including 4 adjustment screws.

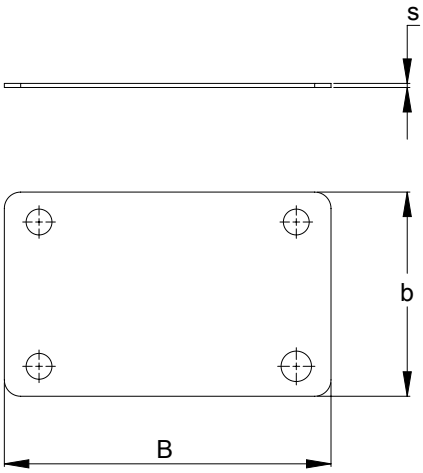

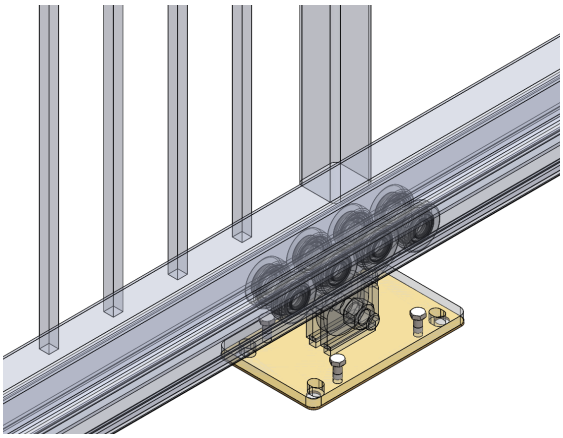

NIKO Profile No.	25.000	26.000	27.000
Part No.	25.X093	26.X093	27.X093
Dimension B (mm)	170	240	330
Dimension b (mm)	110	150	180
Dimension s (mm)	3	3	3

Resting base

Type .X081

For cantilever gates including buffer stop.

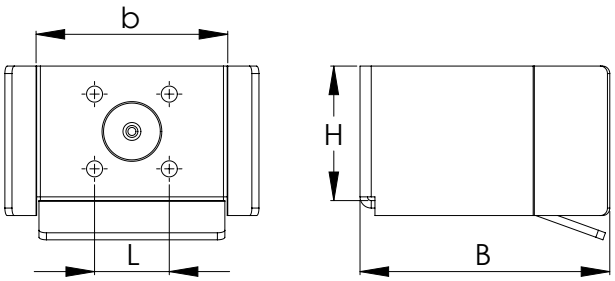

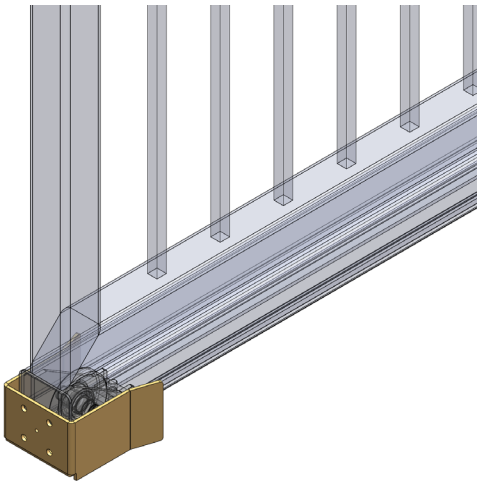

NIKO Profile No.	25.000	26.000	27.000
Part No.	25.X081	26.X081	27.X081
Dimension B (mm)	112	133,5	205
Dimension H (mm)	72	72	71
Dimension L (mm)	40	40	40
Dimension b (mm)	81	101	121

We reserve the right for technical amendments without obligation.
The product pictures and drawings depicted in this catalogue do not always reflect all available sizes.

Adjustable support for resting base — Type .X092

For resting base type .X081 suitable for mounting on column or ground, including plate for height regulation and four screws.

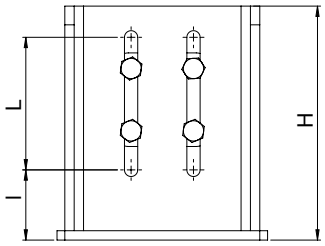

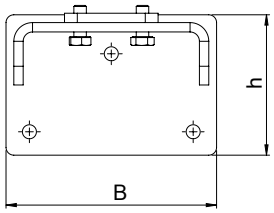

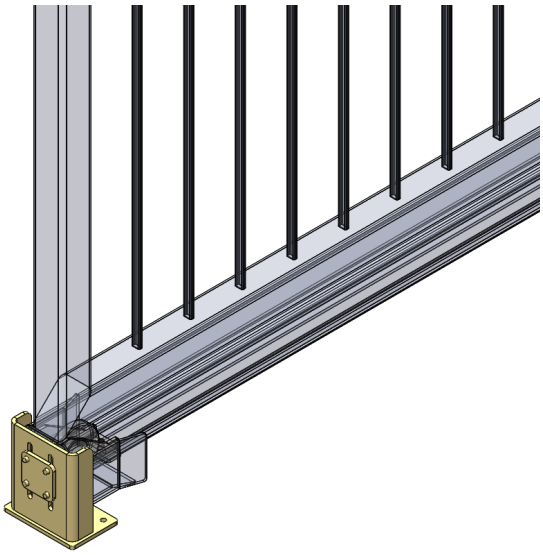

NIKO Profile No.	25.000	26.000	27.000
Part No.	25.X092	26.X092	27.X092
Dimension B (mm)	110	135	155
Dimension H (mm)	140	150	150
Dimension L (mm)	85	85	85
Dimension h (mm)	85	90	90
Dimension l (mm)	35	45	45

Guide roller for cantilever gates with plate — Type .X091

Guide roller with end cap for coating.

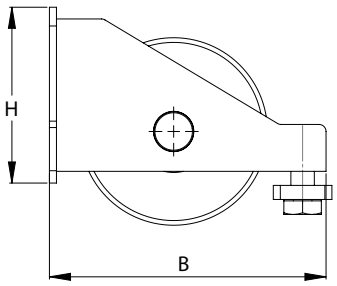

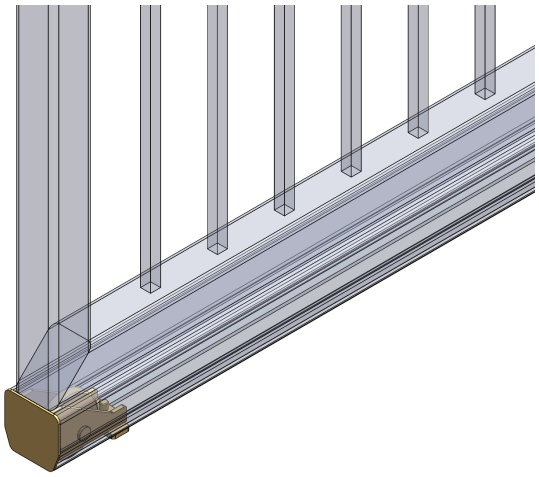

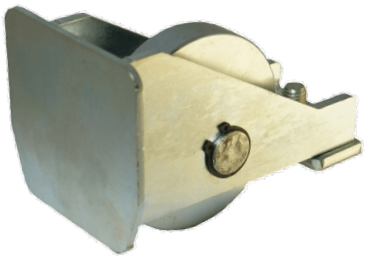

NIKO Profile No.	25.000	26.000	27.000
Part No.	25.X091	26.X091	27.X091
Dimension B (mm)	100	120	135
Dimension H (mm)	60	75	110

We reserve the right for technical amendments without obligation. The product pictures and drawings depicted in this catalogue do not always reflect all available sizes.

Top guide

Type .X094

Top guide for series 25.000/26.000/27.000, with two or four plastic rollers for adjustment. Available zinc plated.

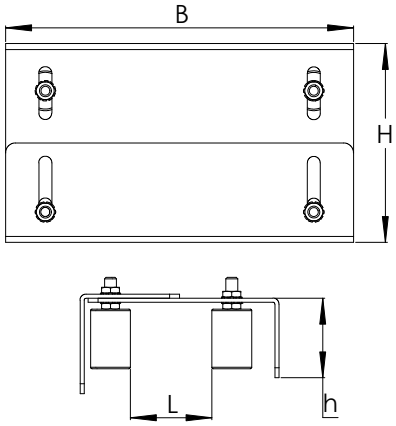

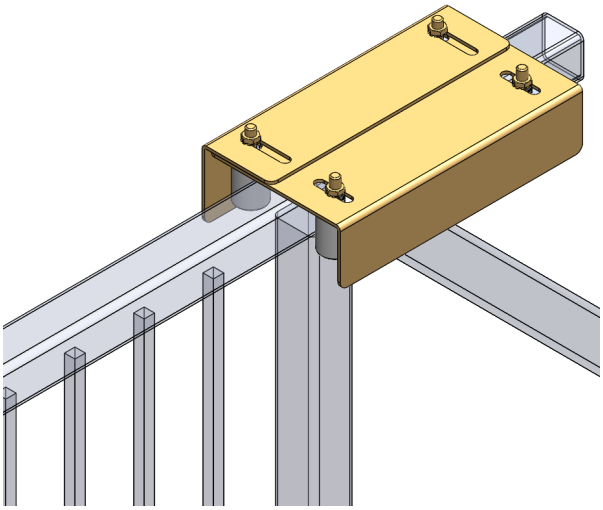

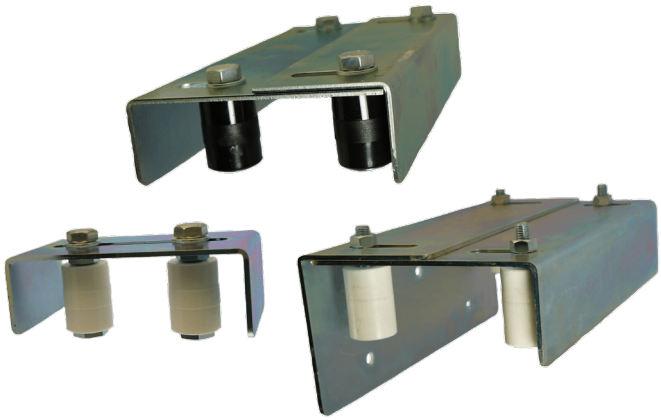

NIKO Profile No.	25.000	26.000	27.000
Part No.	25.X094	26.X094	27.X094
Dimension B (mm)	100	350	350
Dimension H (mm)	190	min 180 - max 220	min 175 - max 215
Dimension L (mm)	min 45 - max 85	min 30 - max 85	min 80 - max 120
Dimension h (mm)	80	80	80

Guide fork

Type .X095

For upper entry guidance with nylon rollers d=50mm.

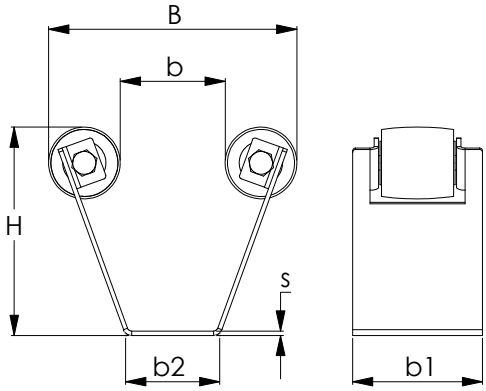

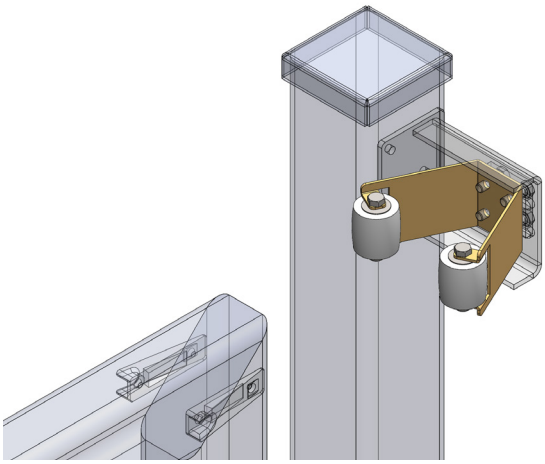

NIKO Profile No.	25.000	26.000	27.000	
Part No.	25.X095	26.X095	27.X095	27.X095L
Dimension B (mm)	170	192	222	307
Dimension H (mm)	145	195	160	249
Dimension D (mm)	8,5	8,5	8,5	8,5
Dimension e (mm)	40	40	40	40
Dimension b (mm)	72,5	95	125	210
Dimension b1 (mm)	90	90	90	90
Dimension b2 (mm)	61	61	100	120
Dimension s (mm)	3	3	3	3

We reserve the right for technical amendments without obligation.
The product pictures and drawings depicted in this catalogue do not always reflect all available sizes.

Nylon wedge guide

Type .E54/55

Nylon wedge guide for upper entry guidance of sliding gates.

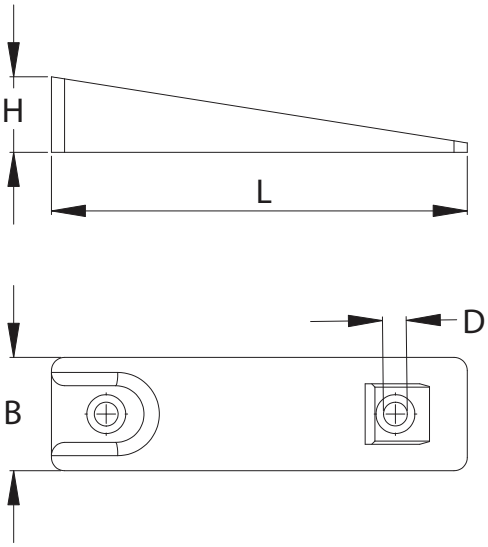

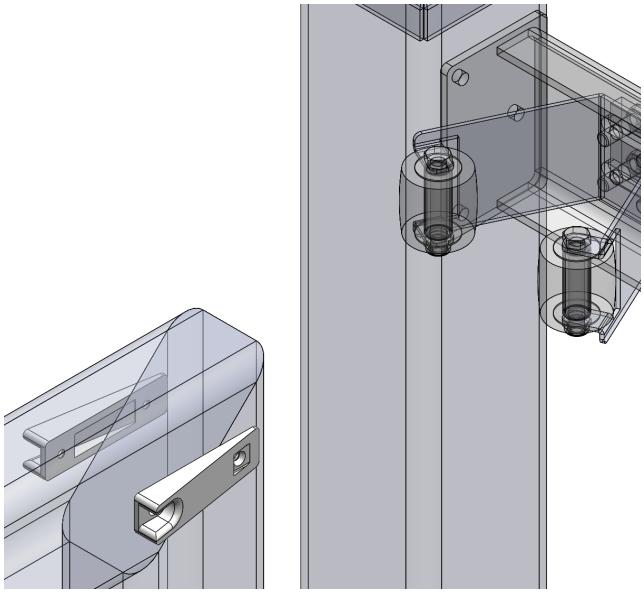

NIKO Part No.	38.E54	38.E55
Dimension B (mm)	30	40
Dimension H (mm)	20	24
Dimension L (mm)	110	120
Dimension D (mm)	6,5	6,8

Guide roller with screw

Type .X69

Guide top nylon roller with screw connection.

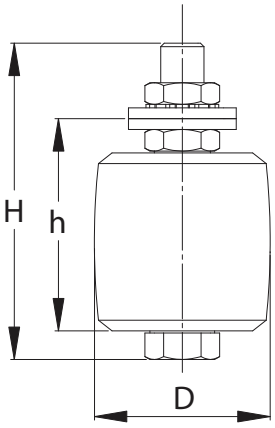

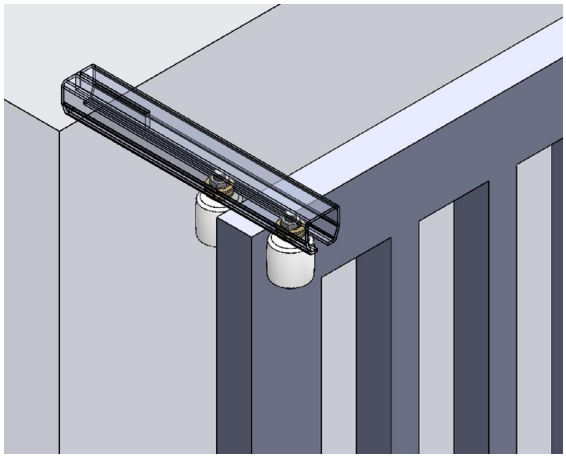

NIKO Part No.	38.X69
Dimension H (mm)	88
Dimension D (mm)	50
Dimension h(mm)	58

We reserve the right for technical amendments without obligation.
The product pictures and drawings depicted in this catalogue do not always reflect all available sizes.

Double guide roller with adjustable bracket

Type .X70

Guide top nylon roller with zinc plated steel adjustable bracket.

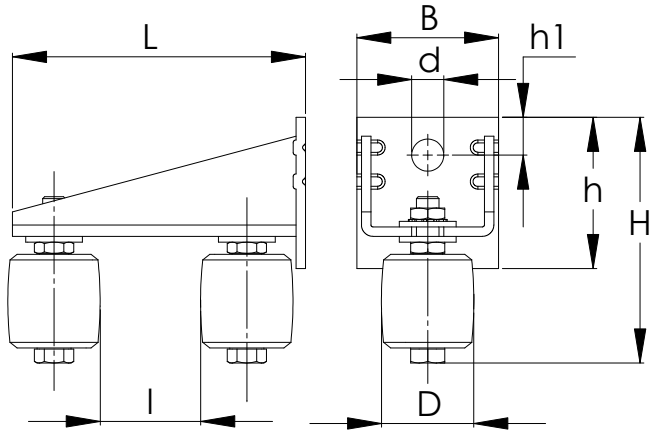

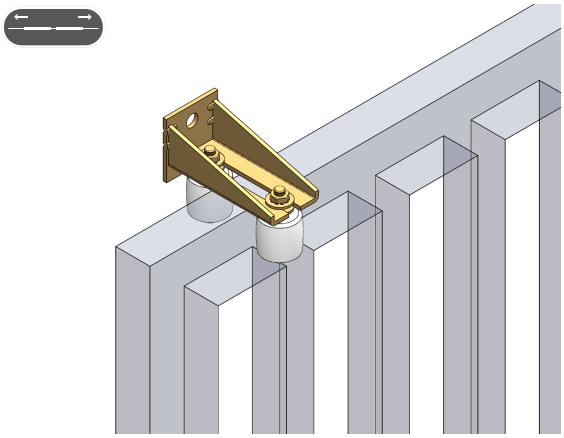

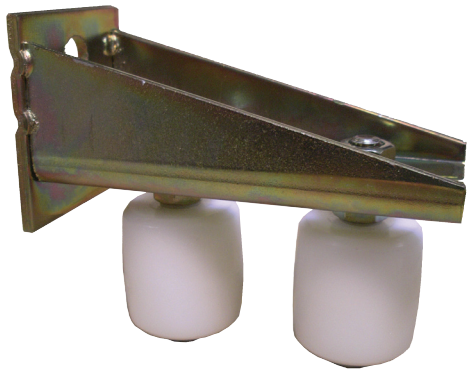

NIKO Art No.	38.X70
Dimension B (mm)	75
Dimension H (mm)	130
Dimension L(mm)	155
Dimension D (mm)	50
Dimension h (mm)	80
Dimension l max (mm)	60
Dimension d (mm)	17
Dimension h1 (mm)	20

Double guide roller with track

Type .X71

Guide top nylon roller with zinc plated steel track, adjustable, and for setting into concrete.

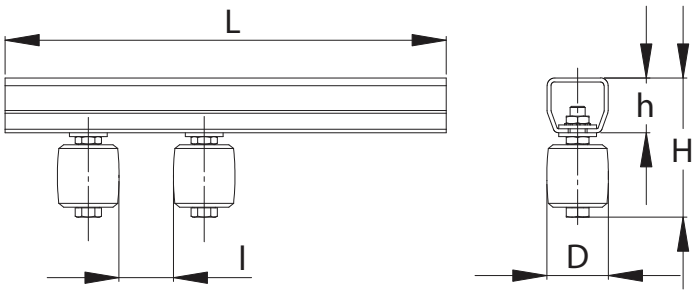

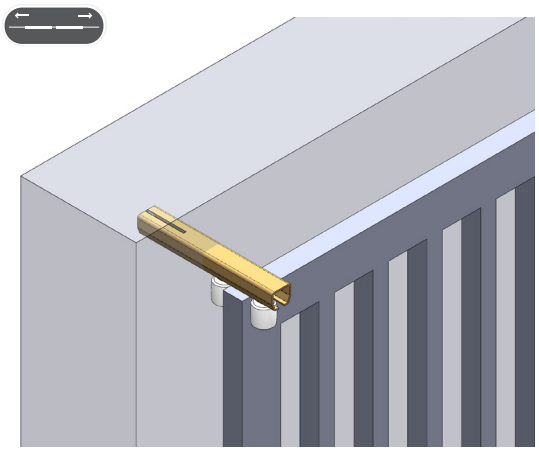

NIKO Art No.	38.X71
Dimension H (mm)	110
Dimension L (mm)	450
Dimension D (mm)	50
Dimension h (mm)	43,5
Dimension l max (mm)	200

We reserve the right for technical amendments without obligation.
The product pictures and drawings depicted in this catalogue do not always reflect all available sizes.

Guide with roller and screw

Type .N49/.M49

Guide roller with steel bolt for screw connection with nut and washer. Available with nylon or brass roller.

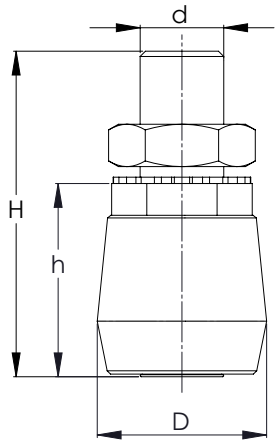

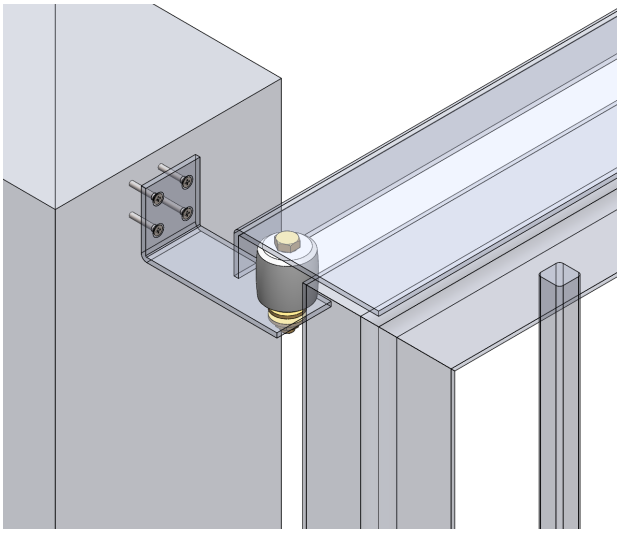

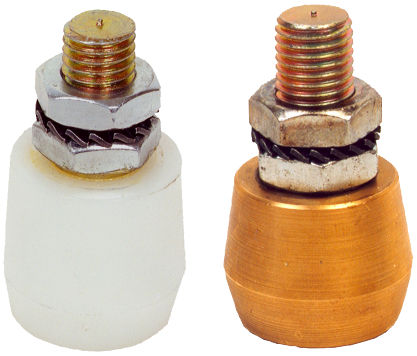

NIKO Profile No.	33.000	34.000	35.000
Part No. NYLON	33.N49	34.N49	35.N49
Part No. BRASS	33.M49	34.M49	35.M49
Dimension H (mm)	46	56	80
Dimension D (mm)	19	32	50
Dimension h (mm)	26	36	50
Dimension d	M10	M12	M20

Tortoise guide

Type .E18/.E19/.E20

Adjustable tortoise guide, nylon or iron cast, passable bottom guide, stable construction including screws and fixing plugs.

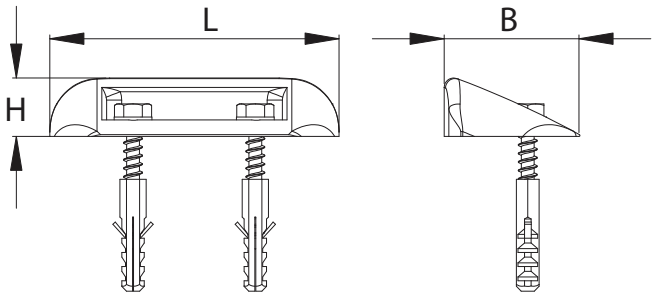

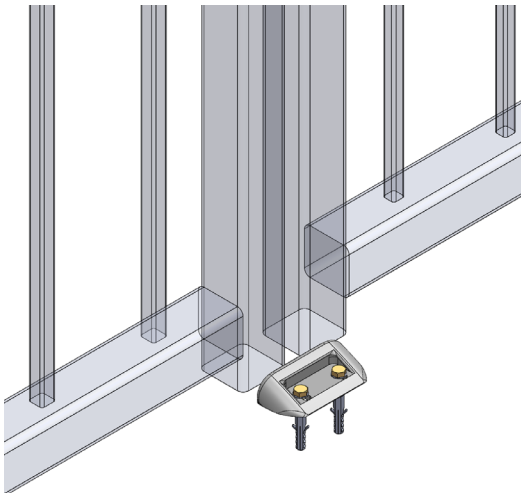

NIKO Part No.	38.E18	38.E19	38.E20
	NYLON	CAST IRON	
Dimension B (mm)	74	74	110
Dimension H (mm)	32	32	40
Dimension L(mm)	150	150	240

We reserve the right for technical amendments without obligation. The product pictures and drawings depicted in this catalogue do not always reflect all available sizes.

ZEUS Door latch

Zinc plated with base plate and rod guides.

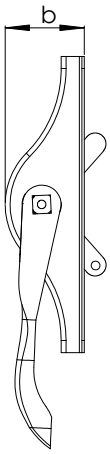

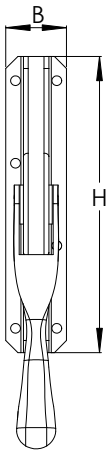

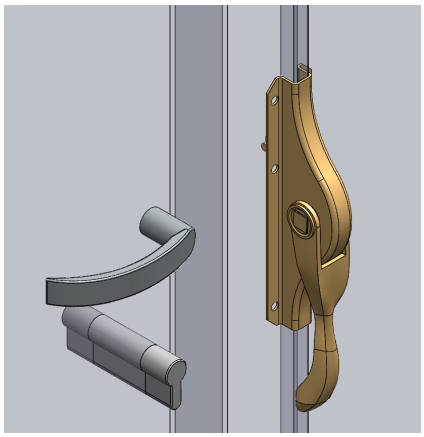

NIKO Part No.	TTR.08	TTR.10	TTR.12	TTR.14	TTR.16
	incl. 2 rod guides			incl. 4 rod guides	
Dimension B (mm)	26	31	35	40	50
Dimension H (mm)	122	138	160	180	225
Dimension L (mm)	33	40	40	50	60

Square rods for TTR door latches

For door latch, zinc plated.

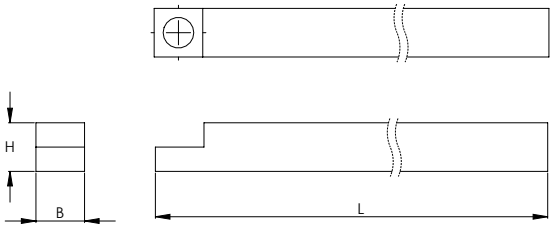

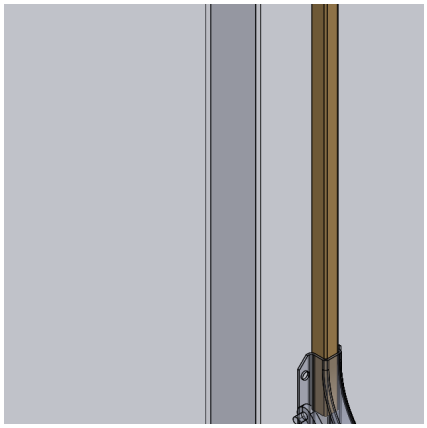

NIKO Part No.	T.2055	T.2057	T.2060	T.2062	T.2065	T.2067	T.2070	T.2072	T.2075	T.2077
Dimension B (mm)	8	8	10	10	12	12	14	14	16	16
Dimension H (mm)	8	8	10	10	12	12	14	14	16	16
Dimension L (mm)	1000	1500	1000	1500	1000	1500	1000	1500	1000	1500

Rod quides

Loose for door latch.

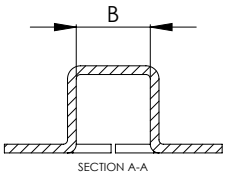

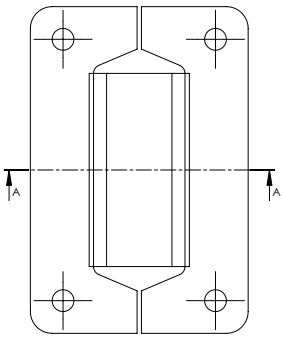

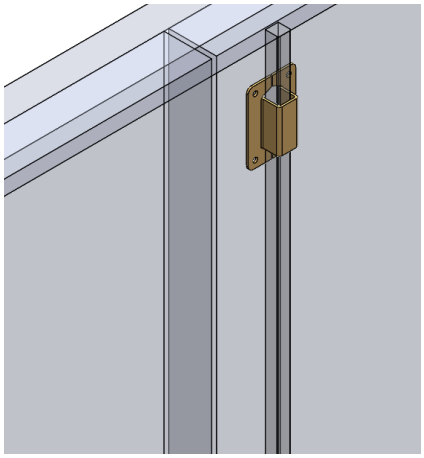

NIKO Part No.	T.2035	T.2036	T.2037	T.2038	T.2039
Dimension B (mm)	8	10	12	14	16

We reserve the right for technical amendments without obligation.
The product pictures and drawings depicted in this catalogue do not always reflect all available sizes.

ZEUS Double acting door hinge

Type PTB

Assembly
Remove tension rivets, engage tabs and tighten. The spindles must align exactly. Wedge the door and tighten the spring with latching bolt. Insert the tension rivets.

Assembly tips
At strong frequented or heavily used doors a third hinge should be installed in the upper third part of the door. No warranty is covered at overloading or assembly faults!
Double acting door hinges should generally be screwed on. These door hinges are not suitable for welding.

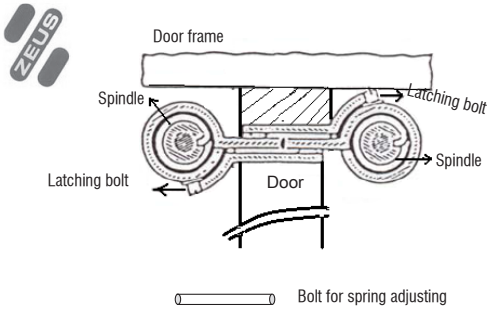

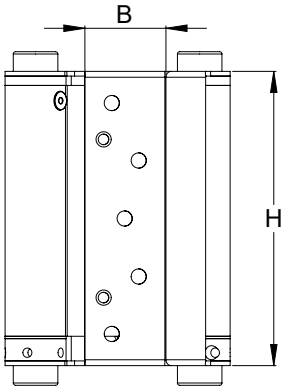

Two hinges per door panel

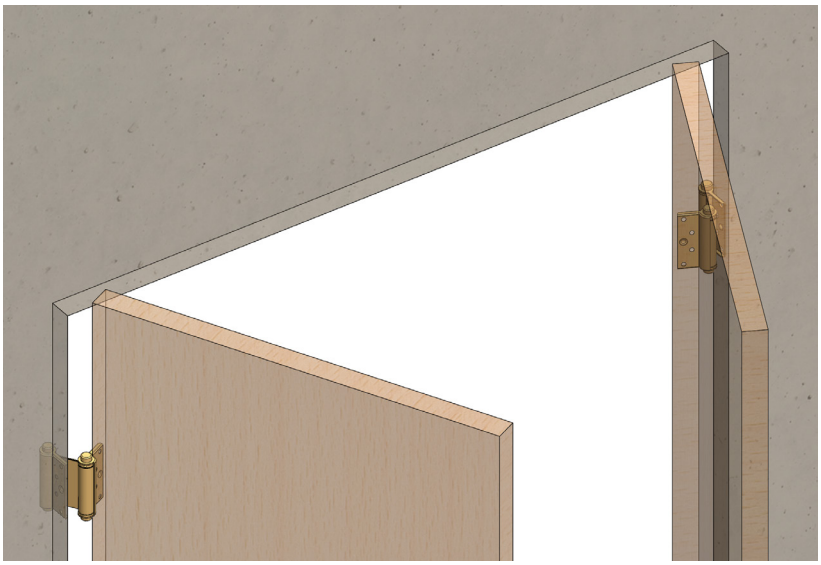

NIKO Part No.	PTB.29	PTB.30	PTB.33	PTB.36	PTB.39	PTB.42
Dimension B (mm)	18-25	25-30	30-35	35-40	40-45	45-50
Dimension H (mm)	75	85	100	125	150	175
Weight per door panel max.	15	22	27	40	55	70

Springs for replacement

For ZEUS double acting door hinge.

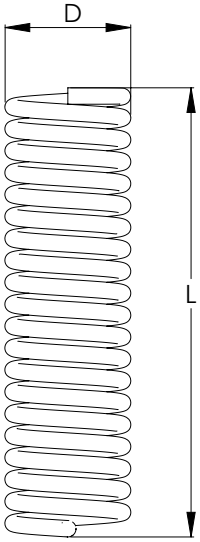

NIKO Part No.	X5.L29	X5.L30	X5.L33	X5.L36	X5.L39	X5.L42
Dimension D (mm)	17	18	18	22	26	28
Dimension L (mm)	49	57	73	91	113	132

We reserve the right for technical amendments without obligation. The product pictures and drawings depicted in this catalogue do not always reflect all available sizes.

ZEUS Locking latch for folding doors

Type FTTR

For use left and right, for light and heavy door panels.

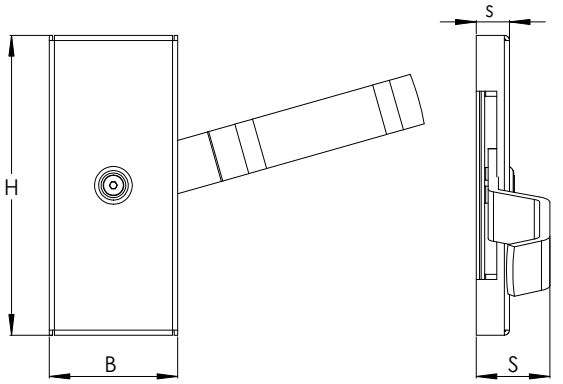

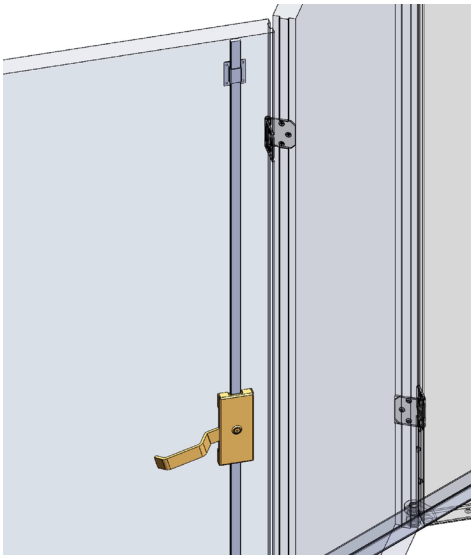

NIKO Part No.	FTTR.160	FTTR.175
Dimension B (mm)	50	75
Dimension H (mm)	160	175
Dimension S (mm)	39	42
Dimension s (mm)	20	21

Narrow and wide guide for locking latch

For locking latch for folding doors.

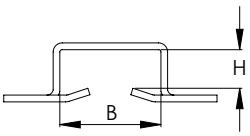

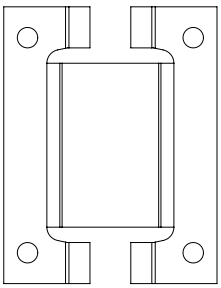

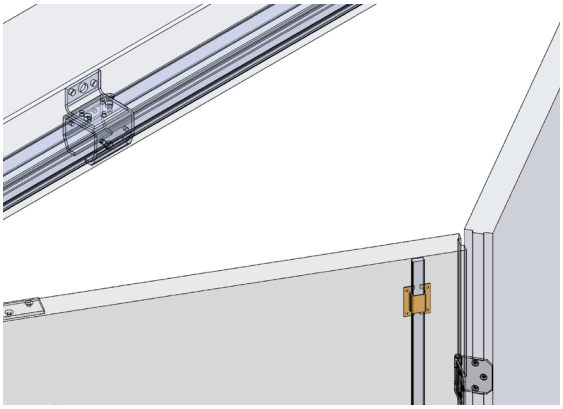

Narrow X5.S25

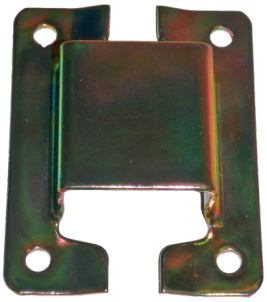

Wide X5.S30

NIKO Part No.	X5.S25	X5.S30
Dimension B (mm)	25	30
Dimension H (mm)	8	8

We reserve the right for technical amendments without obligation.
The product pictures and drawings depicted in this catalogue do not always reflect all available sizes.

Catch lock with hook

Type .511

Zinc plated door lock for sliding gates with lift-out safety. Heavy duty version adjusted for profile cylinder including locking plate.

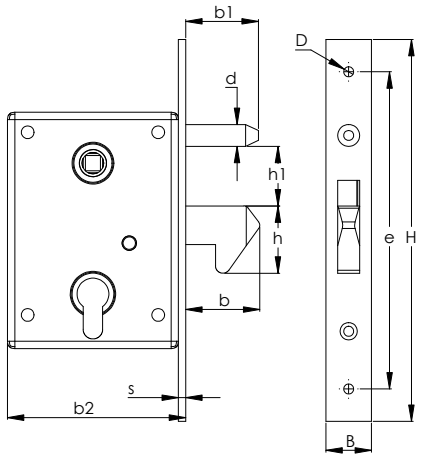

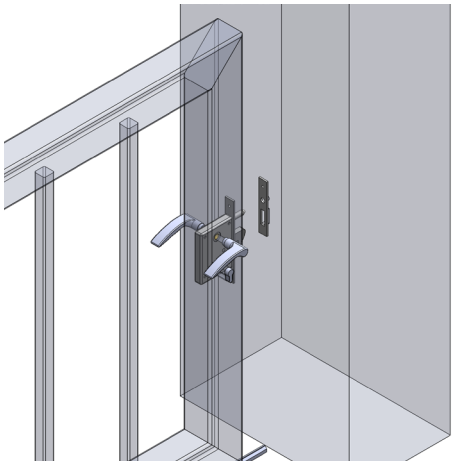

NIKO Part No.	X5.511
Dimension B (mm)	25
Dimension H (mm)	210
Dimension D (mm)	5.5
Dimension b (mm)	42
Dimension b1 (mm)	40
Dimension b2 (mm)	98
Dimension h (mm)	37
Dimension h1 (mm)	34
Dimension d (mm)	12
Dimension e (mm)	175
Dimension s (mm)	4

Door buffer with spring

Type .510

Zinc plated, for cantilever or bottom-running sliding gates, with spring buffer for gates up to 400kg.

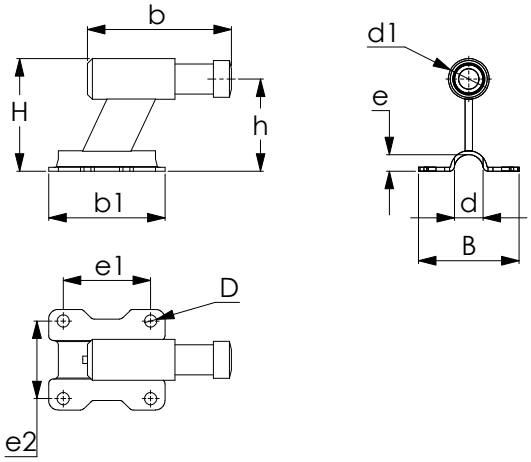

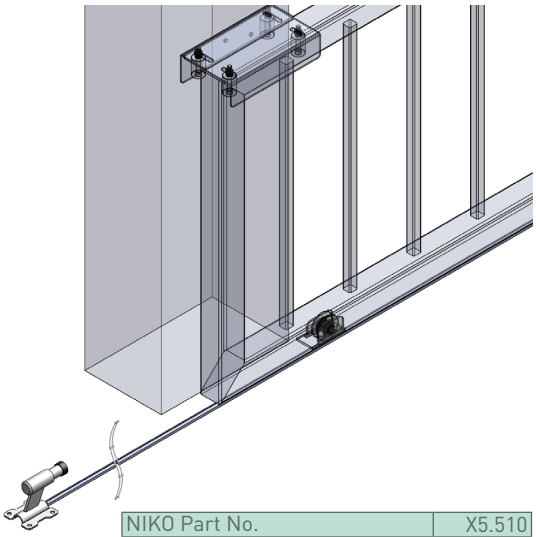

NIKO Part No.	X5.510
Dimension B (mm)	106
Dimension H (mm)	116
Dimension D (mm)	12,5
Dimension b (mm)	150
Dimension b1 (mm)	120
Dimension h (mm)	90
Dimension d (mm)	20
Dimension d1 (mm)	39
Dimension e (mm)	17
Dimension e1 (mm)	90
Dimension e2 (mm)	77

We reserve the right for technical amendments without obligation. The product pictures and drawings depicted in this catalogue do not always reflect all available sizes.

By combining high-performance synthetic materials with stainless steel, a door holder has been originated, which meets the high demands in the construction sector.
As an introductory model the type 14K is offered in four standard colors. White, similar to RAL 9010, light grey, similar to RAL 7045, white aluminum, similar to RAL 9006 and dark brown, similar to RAL 8028.

- High quality synthetic body
by using new technologies of injection moulding procedure with glass fibre reinforcement and an exact power calculation, an attractive & stable body has been developed.

- ZEUS Step plate
through the use of the proven ZEUS step plate, an optimal wear resistance and power transmission is given.

- Push pin and coil spring
are made of stainless steel, so that even with intensive use the sliding and thus optimal provision at the retraction of the door holder is ensured. Stroke 50 mm.

- Accessories
In the scope of delivery are included: stainless steel 304/A2 fixing screws 4.2 x 38, assembly instructions and drill template.

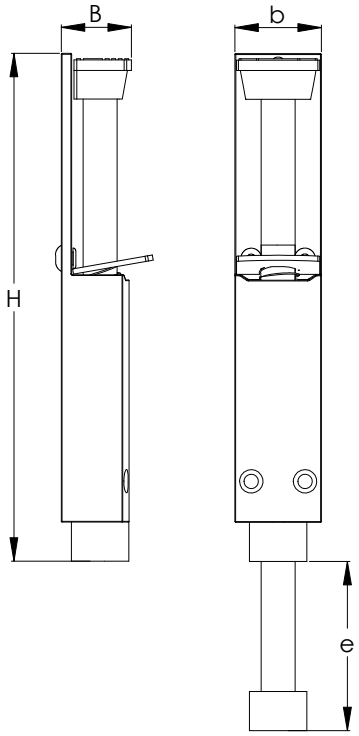

NIKO Part No.	X5.14KA	X5.14KS	X5.14KB	X5.14KW
	white aluminium	light grey	dark brown	white
Dimension B (mm)	33	33	33	33
Dimension H (mm)	213	213	213	213
Dimension b (mm)	28	28	28	28
Dimension e (mm)	50	50	50	50

We reserve the right for technical amendments without obligation.
The product pictures and drawings depicted in this catalogue do not always reflect all available sizes.

Gate hinge, stainless steel — Type .CA100

Solid stainless steel hinge construction with 15mm mandrel. Aluminium gate part for fastening with two screws M8X20. Aluminium wall mounting plates are optional. Suitable for pedestrian doors and light duty automated gates. Suitable mounting plates PL0610 or PL1010.

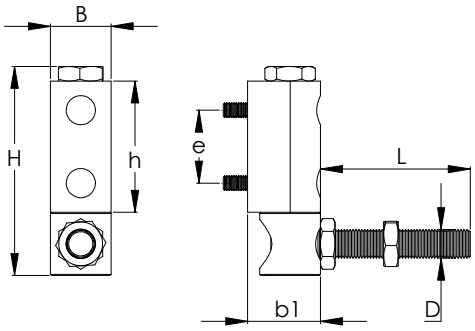

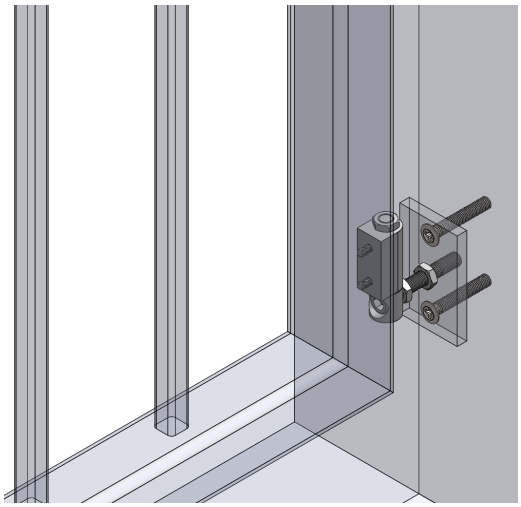

NIKO Part No.	X5.CA100
Dimension B (mm)	30
Dimension H (mm)	90
Dimension L (mm)	70
Dimension D	M14
Dimension h (mm)	54
Dimension e (mm)	29
Dimension b1 (mm)	30

Aluminium plate for wall mounting with 1 thread & 2 mounting holes .PL0610

Aluminium mounting plate for pedestrian doors with holes for screw connection and threaded hole M14 for gate hinge CA100. Available finish in aluminium nature or RAL7035 powder coated.

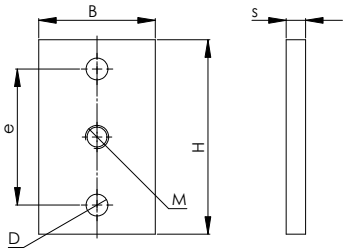

NIKO Part No.	X5.PL0610R	X5.PL0610N
	RAL 7035	Aluminum nature
Dimension B (mm)	60	60
Dimension H (mm)	100	100
Dimension M	M14	M14
Dimension D (mm)	11	11
Dimension e (mm)	70	70
Dimension s (mm)	10	10

Aluminium plate for wall mounting with 1 thread & 4 mounting holes .PL1010

Aluminium mounting plate for automated doors with holes for screw connection and threaded hole M14 for gate hinge CA100. Available finish in aluminium nature or RAL7035 powder coated.

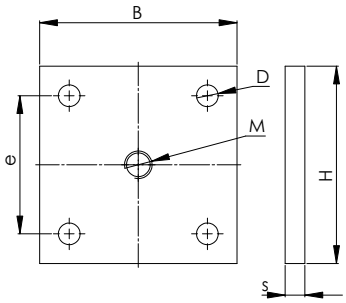

NIKO Part No.	X5.PL1010R	X5.PL1010N
	RAL 7035	Aluminium nature
Dimension B (mm)	100	100
Dimension H (mm)	100	100
Dimension M	M14	M14
Dimension D (mm)	11	11
Dimension e (mm)	70	70
Dimension s (mm)	10	10

We reserve the right for technical amendments without obligation. The product pictures and drawings depicted in this catalogue do not always reflect all available sizes.

Double gate hinge, stainless steel — Type .CA200

Solid stainless steel hinge construction with 15mm mandrel. Aluminium gate part for fastening with three screws M8X20. Aluminium wall mounting plates are optional. Suitable for heavy duty automated gates. Suitable mounting plate PL0821.

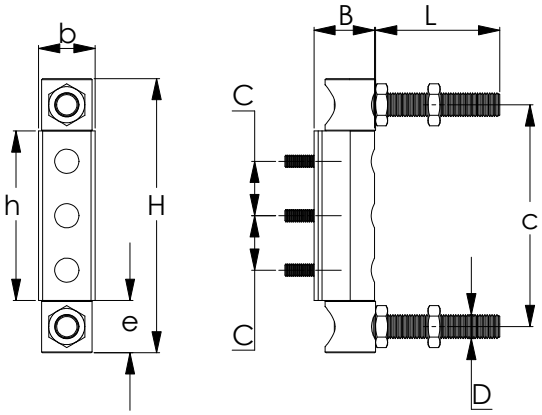

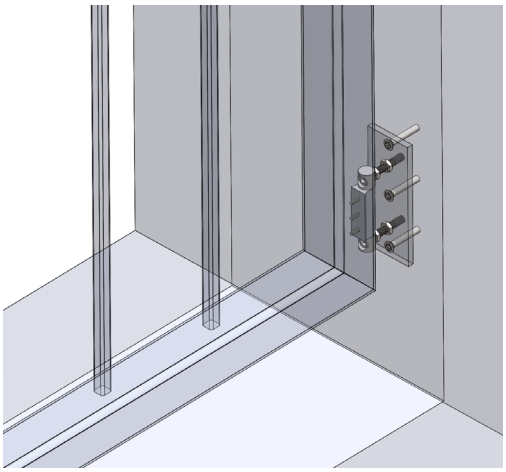

NIKO Part No.	X5.CA200
Dimension B (mm)	30
Dimension H (mm)	135
Dimension L (mm)	70
Dimension D	M14
Dimension C (mm)	27
Dimension b (mm)	28
Dimension h (mm)	84
Dimension e (mm)	25
Dimension c (mm)	110

Aluminium plate for wall mounting with 2 threads & 3 mounting holes — .PL0821

Aluminium mounting plate with holes for screw connection and threaded hole M14 for gate hinge CA200.
Available finish in aluminium nature or RAL7035 powder coated.

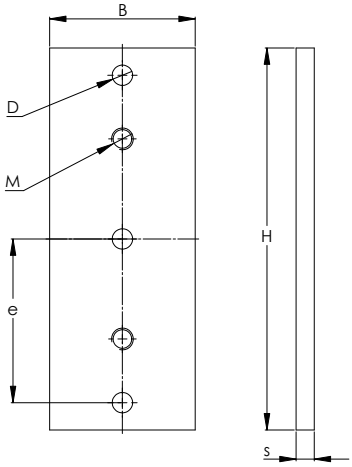

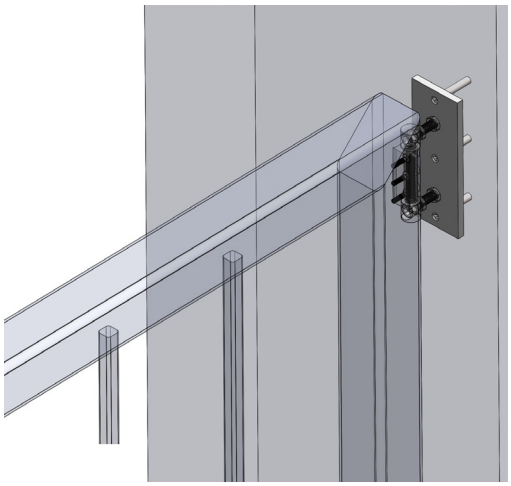

NIKO Part No.	X5.PL0821R	X5.PL0821N
	RAL 7035	Aluminum nature
Dimension B (mm)	80	80
Dimension H (mm)	210	210
Dimension M	M14	M14
Dimension D (mm)	11	11
Dimension e (mm)	90	90
Dimension s (mm)	10	10

We reserve the right for technical amendments without obligation.
The product pictures and drawings depicted in this catalogue do not always reflect all available sizes.

Steel gate hinge — Type .BA10

Zinc plated steel gate hinge with adjustable nut for welding.

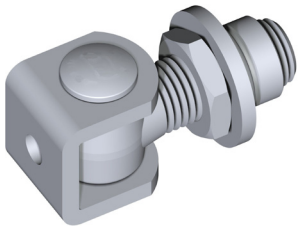

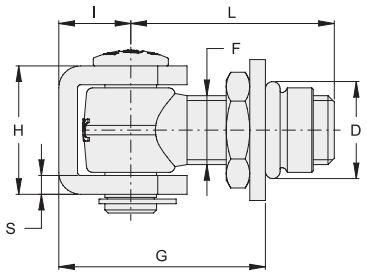

NIKO Part No.	X5.BA1020	X5.BA1024
Dimension G (mm)	54-68	63-81
Dimension D (mm)	30	35
Dimension F	M20	M24
Dimension I (mm)	21	25
Dimension L (mm)	60	70
Dimension H (mm)	39	47
Dimension S (mm)	6	6

Steel gate hinge — Type .BA20

Zinc plated steel gate hinge with threaded part to build into wall.

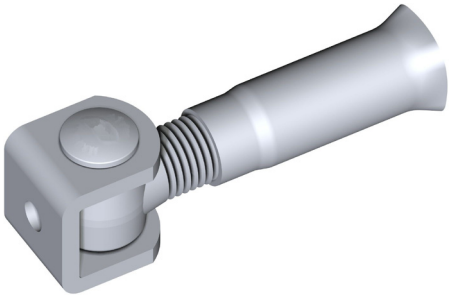

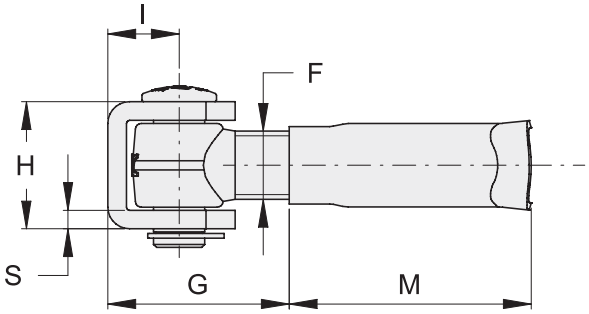

NIKO Part No.	X5.BA2020
Dimension M (mm)	94
Dimension F	M20
Dimension G (mm)	42-66
Dimension I (mm)	21
Dimension H (mm)	39
Dimension S (mm)	6

We reserve the right for technical amendments without obligation.
The product pictures and drawings depicted in this catalogue do not always reflect all available sizes.

Steel gate hinge — Type .BA30

Zinc plated door hinge for welding, with long threaded part for screw on.

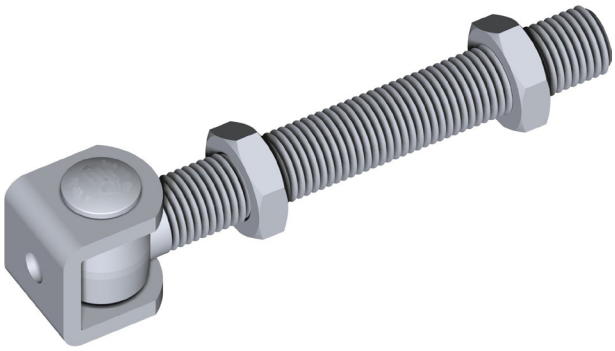

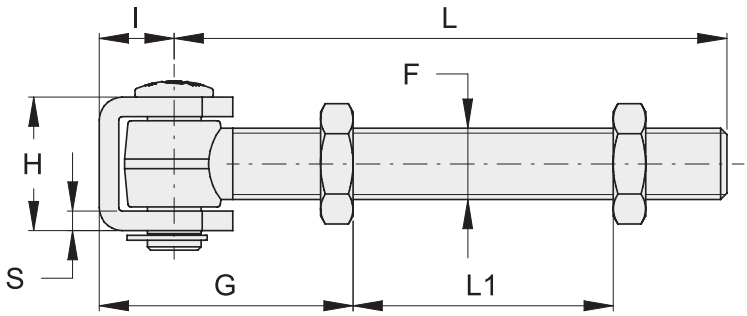

NIKO Part No.	X5.BA3020
Dimension L1 (mm)	max. 130
Dimension F	M20
Dimension L (mm)	160
Dimension G (mm)	min. 50
Dimension I (mm)	21
Dimension H (mm)	39
Dimension S (mm)	6

Steel gate hinge — Type .BA15

Zinc plated door hinge for welding, with threaded part and mounting plate to screw on.

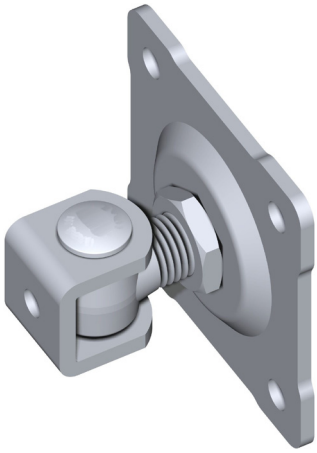

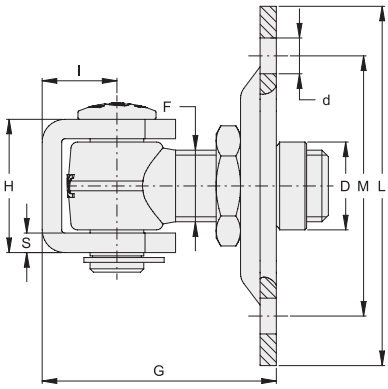

NIKO Part No.	X5.BA1520
Dimension L (mm)	90x90
Dimension M (mm)	64x64
Dimension D (mm)	24
Dimension d (mm)	9
Dimension F	M20
Dimension G (mm)	90-74
Dimension I (mm)	21
Dimension S (mm)	6
Dimension H (mm)	39

We reserve the right for technical amendments without obligation. The product pictures and drawings depicted in this catalogue do not always reflect all available sizes.

Steel gate hinge — Type .BA40

Zinc plated door hinge for welding, with long threaded part for screw on. Adjustable welding plate with elongated hole for gate opening up to 180°.

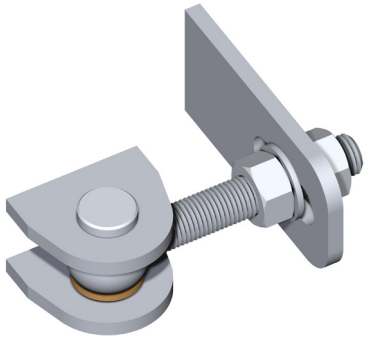

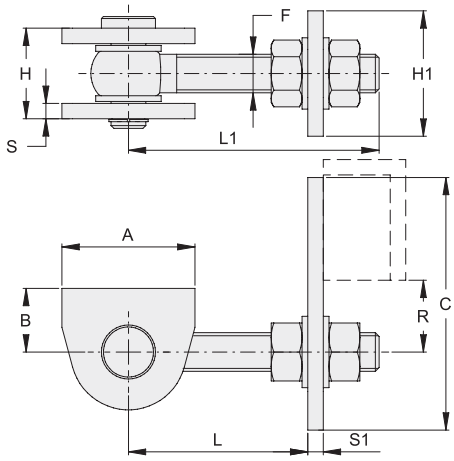

NIKO Part No.	X5.BA4016
Dimension H1 (mm)	50
Dimension F	M16
Dimension L1 (mm)	121
Dimension H (mm)	38
Dimension S1 (mm)	6/8
Dimension R (mm)	18-34
Dimension L (mm)	47-93
Dimension A (mm)	50,5
Dimension B (mm)	27
Dimension C (mm)	90

Steel gate latch — Type .TF16

Zinc plated gate latch, bayonet latch for screw on or welding.

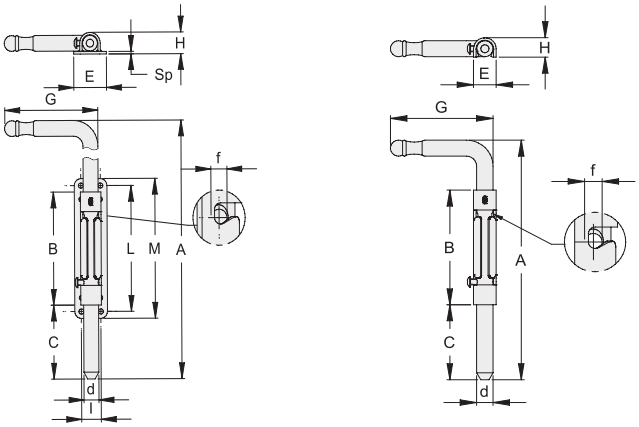

NIKO Part No.	X5.TF16W	X5.TF16S
Dimension d (mm)	16	16
Dimension C (mm)	6-75	6-75
Dimension B (mm)	115	115
Dimension A (mm)	440	440
Dimension f (mm)	8	8
Dimension G (mm)	100	100
Dimension E (mm)	47	22
Dimension H (mm)	22,5	20
Dimension M (mm)	142	-
Dimension L (mm)	128	-
Dimension l (mm)	21	-
Dimension Sp (mm)	2,5	-

We reserve the right for technical amendments without obligation.
The product pictures and drawings depicted in this catalogue do not always reflect all available sizes.

Steel gate hinge

Type .BA50WI/70W

Adjustable gate hinge with plate for welding, stainless steel (304/A2) or zinc plated.

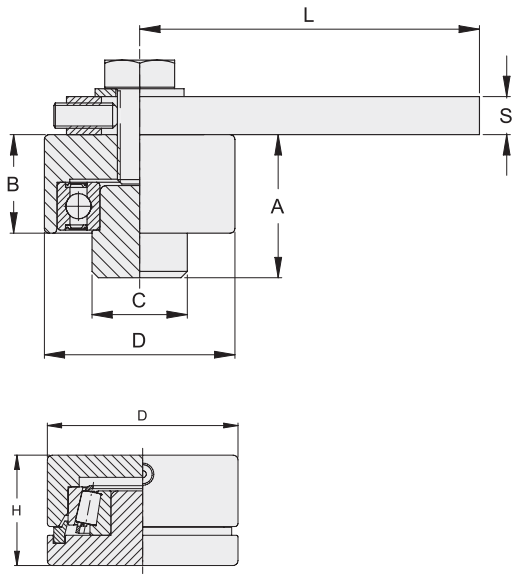

STAINLESS STEEL 304

NIKO Part No.	X5.BA50WI	X5.BA70W
	Stainless steel 304/A2	Zinc plated
Dimension S (mm)	10	12
Dimension L (mm)	75-85	109-119
Dimension A (mm)	37	46
Dimension C (mm)	30	35
Dimension D (mm)	50	70
Dimension B (mm)	26	32
Dimension H (mm)	32	40

Steel gate hinge

Type .BA50S/70S

Zinc plated gate hinge with plate for screw on.

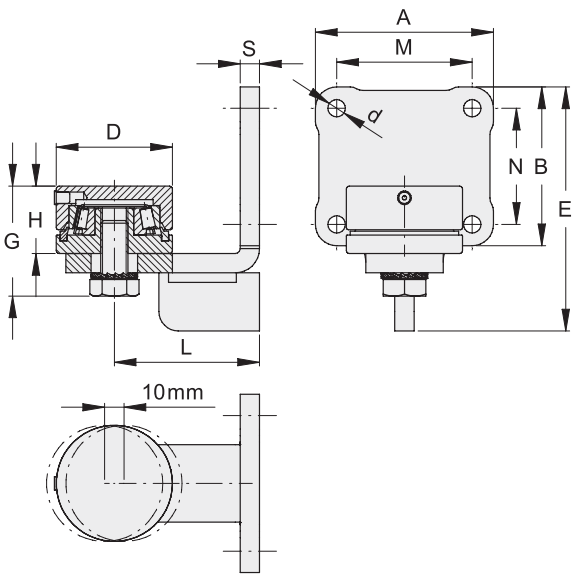

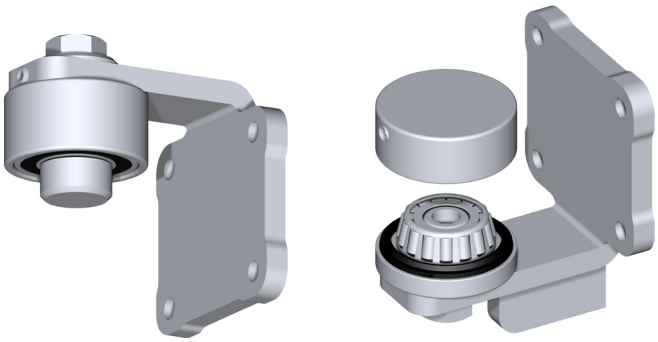

NIKO Part No.	X5.BA50S	X5.BA70S
Dimension A (mm)	82	109
Dimension B (mm)	72	94
Dimension D (mm)	50	70
Dimension E (mm)	110	143
Dimension G (mm)	50	63
Dimension H (mm)	32	40
Dimension L (mm)	65-75	75-85
Dimension M (mm)	60	85
Dimension N (mm)	50	70
Dimension S (mm)	8	10
Dimension d (mm)	9	11

We reserve the right for technical amendments without obligation.
The product pictures and drawings depicted in this catalogue do not always reflect all available sizes.

Flush handle

Type .400/401

Flush handle for heavy duty sliding gates. Special crimped version for secure use. Retractable shell-formed handle from steel galvanized S=1.2mm or stainless steel, with punching for screw or rivet.

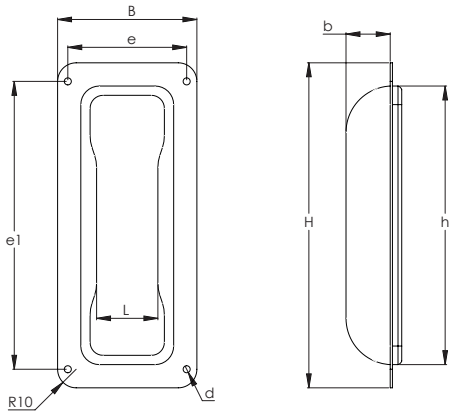

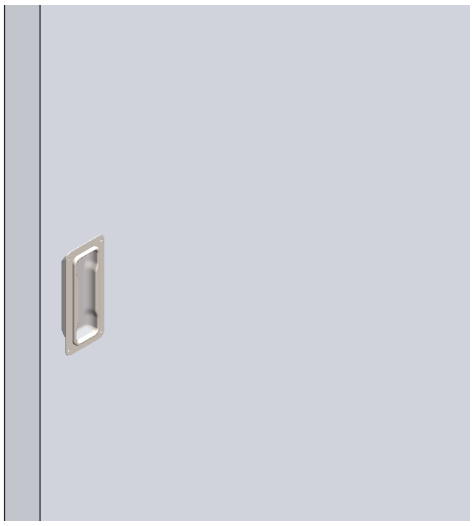

Type	Part No.	H	e1	B	e	d	L	h	b
Flush handle with punching, zinc plated	X5.400	175mm	155mm	75mm	64mm	3,8mm	33mm	145mm	20mm
Flush handle with punching, stain-less steel 316/A4	X5.401	175mm	155mm	75mm	64mm	3,8mm	33mm	145mm	20mm

Gate handle

Type .500

For sliding gates with stable mounting plate, zinc plated. Mounting holes are identical to the flush handle type X5.400 / 401 and can thus be screwed up.

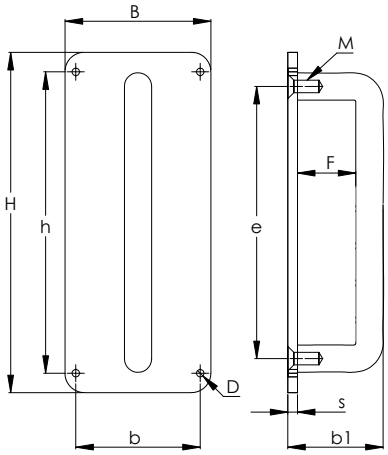

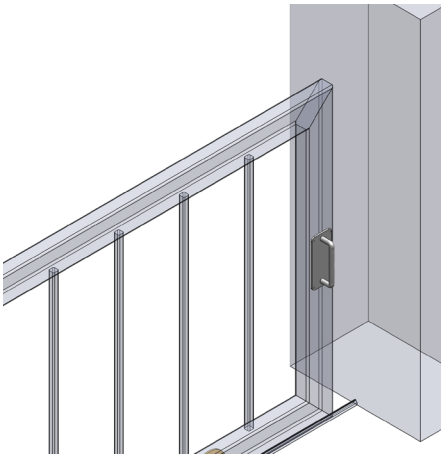

NIKO Part No.	X5.500
Dimension B (mm)	75
Dimension H (mm)	175
Dimension F (mm)	30
Dimension D (mm)	3,8
Dimension M	M6
Dimension b (mm)	64
Dimension b1 (mm)	49
Dimension h (mm)	155
Dimension e (mm)	140
Dimension s (mm)	5

We reserve the right for technical amendments without obligation. The product pictures and drawings depicted in this catalogue do not always reflect all available sizes.

Steel bottom roller

Type X2.V61-V121

Steel roller with brackets for angle guide rail (single bearing).

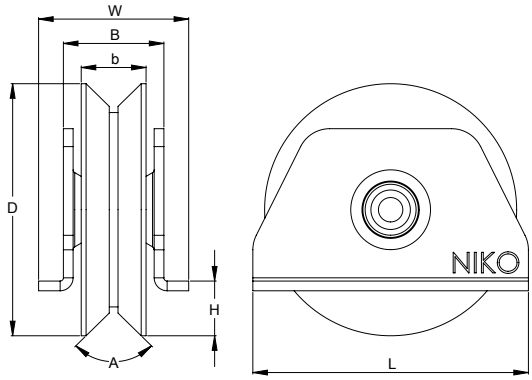

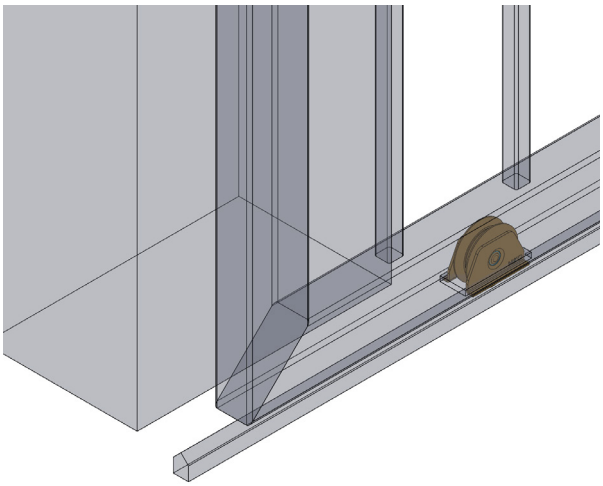

NIKO Part No.	X2.V61	X2.V81	X2.V101	X2.V121
Load Kg	130	180	210	250
Dimension B (mm)	26	29	29	34
Dimension H (mm)	15	19	21	31
Dimension D (mm)	58	78	98	118
Dimension L (mm)	60	85	100	100
Dimension A	92º	92º	92º	92º
Dimension b (mm)	17	20	20	22
Dimension W (mm)	37	44	45	50

Steel bottom roller

Type X2.061-081

Steel roller with brackets for round guide rail (single bearing).

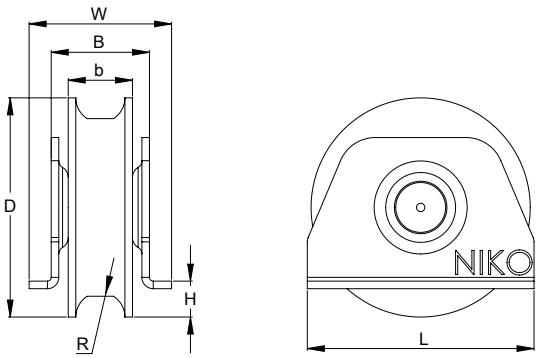

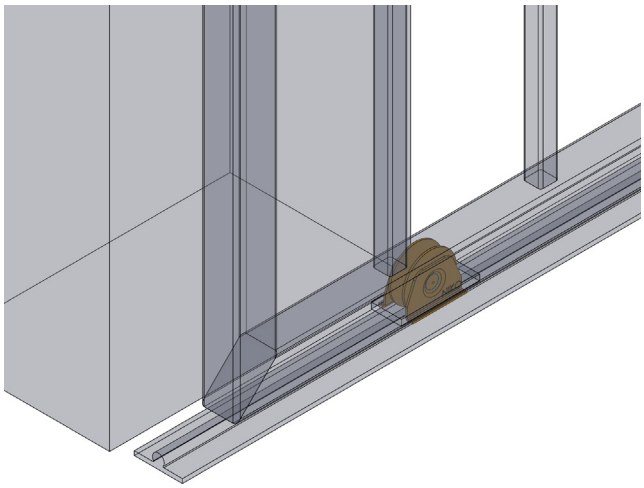

NIKO Part No.	X2.061	X2.081
Load Kg	130	180
Dimension B (mm)	26	29
Dimension H (mm)	15	19
Dimension D (mm)	58	78
Dimension L (mm)	60	85
Dimension R (mm)	6,5	8
Dimension b (mm)	17	20
Dimension W (mm)	37	44

We reserve the right for technical amendments without obligation.
The product pictures and drawings depicted in this catalogue do not always reflect all available sizes.

Steel bottom roller — Type X2.S61-S101

Steel roller with brackets for square guide rail (single bearing).

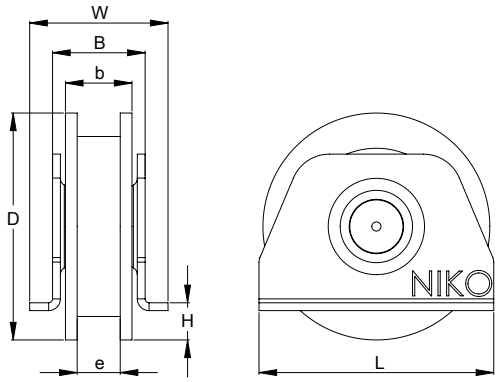

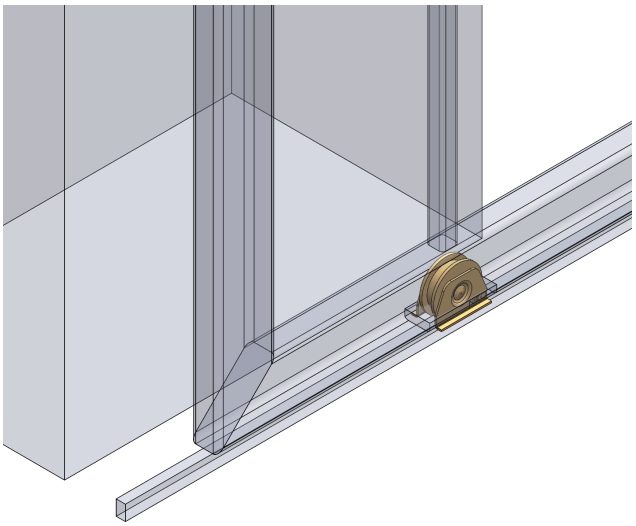

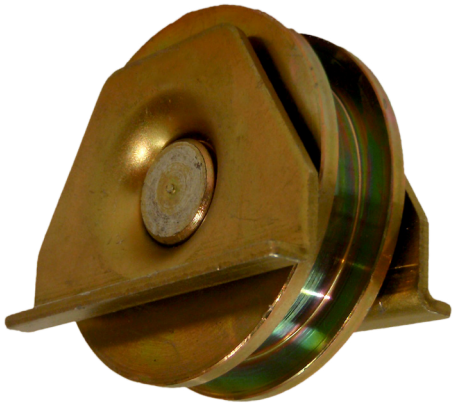

NIKO Part No.	X2.S61	X2.S81	X2.S101
Load Kg	130	180	210
Dimension B (mm)	26	29	29
Dimension H (mm)	15	19	21
Dimension D (mm)	58	78	98
Dimension L (mm)	60	85	100
Dimension b (mm)	17	20	20
Dimension e (mm)	11	13	13
Dimension W (mm)	37	44	45

Steel bottom roller — Type X2.V60-V100

Steel roller with axle for angle guide rail (single bearing).

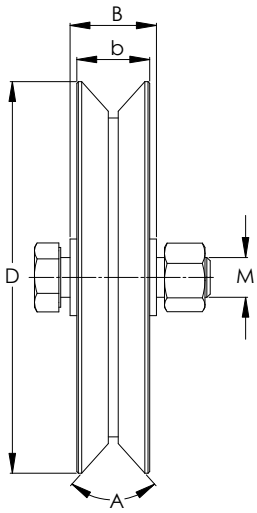

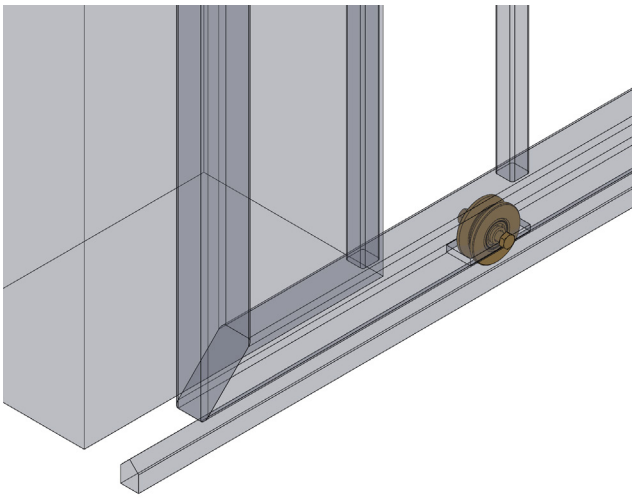

NIKO Part No.	X2.V60	X2.V80	X2.V100
Load Kg	130	180	210
Dimension B (mm)	22	24	24
Dimension D (mm)	58	78	98
Dimension M	M10	M12	M12
Dimension A	92°	92°	92°
Dimension b (mm)	17	20	20

We reserve the right for technical amendments without obligation.
The product pictures and drawings depicted in this catalogue do not always reflect all available sizes.

Steel bottom roller

Type X2.060-080

Steel roller with axle for round guide rail (single bearing).

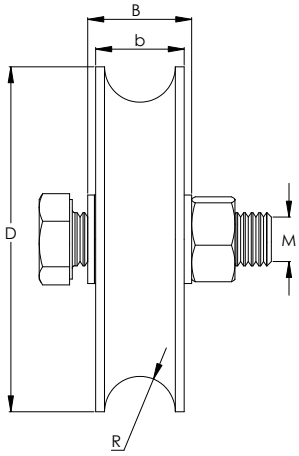

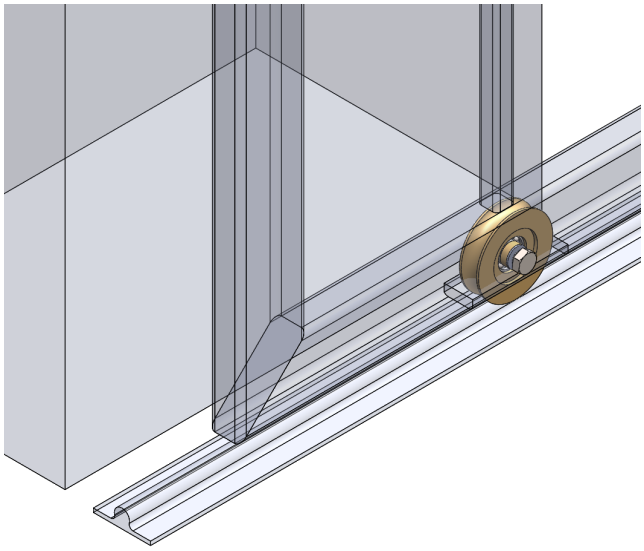

NIKO Part No.	X2.060	X2.080
Load Kg	130	180
Dimension B (mm)	17	20
Dimension D (mm)	58	78
Dimension M	M10	M12
Dimension R (mm)	6,5	8
Dimension b (mm)	17	20

Steel bottom roller

Type X2.S60-S80

Steel roller with axle for square guide rail (single bearing).

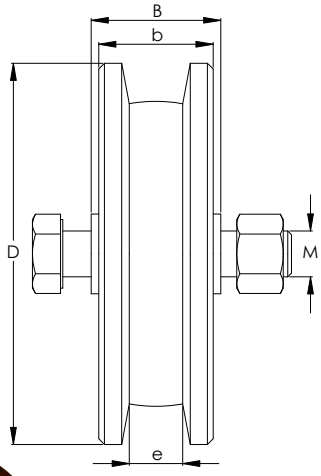

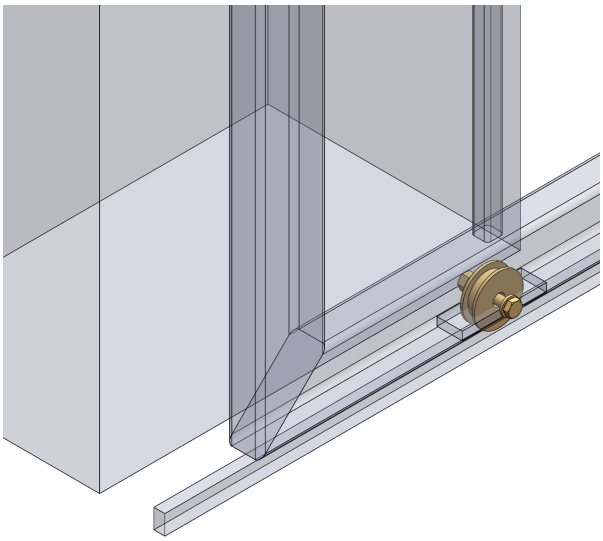

NIKO Part No.	X2.S60	X2.S80
Load Kg	130	180
Dimension B (mm)	22	24
Dimension D (mm)	58	78
Dimension M	M10	M12
Dimension b (mm)	17	20
Dimension e (mm)	11	13

We reserve the right for technical amendments without obligation.
The product pictures and drawings depicted in this catalogue do not always reflect all available sizes.

Steel bottom roller

Type X1.S42-S45

Steel bottom roller with axle for square guide rail plate (single bearing).

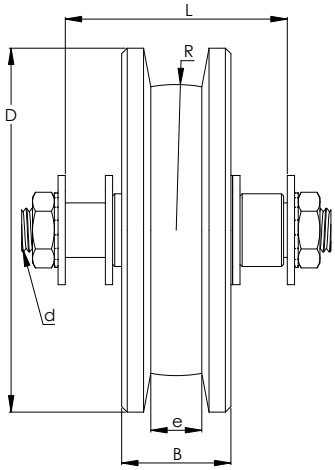

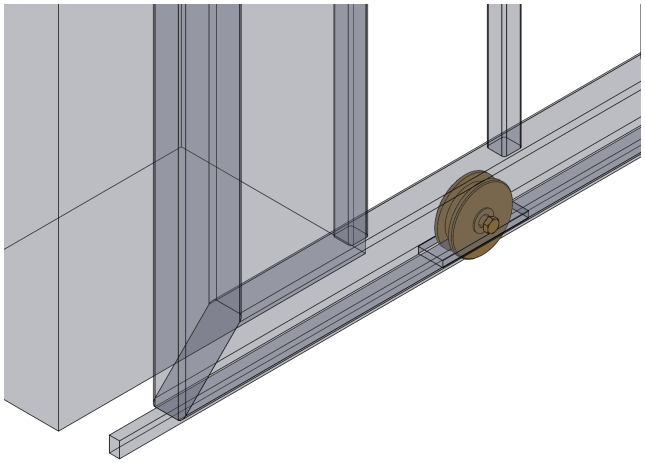

NIKO Part No.	X1.S42	X1.S43	X1.S44	X1.S45
Load Kg	200	270	400	500
Dimension B (mm)	35	35	35	35
Dimension D (mm)	100	120	140	160
Dimension R (mm)	40	50	60	70
Dimension L (mm)	60	60	60	60
Dimension d (mm)	15	15	20	20
Dimension e (mm)	14	14	14	14

Roller for wire rope

Type X2.D60

Heavy duty steel roller for wire rope 4-6mm (single bearing).

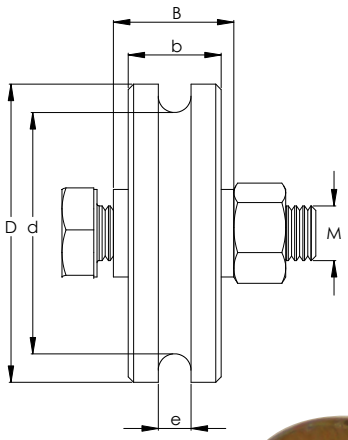

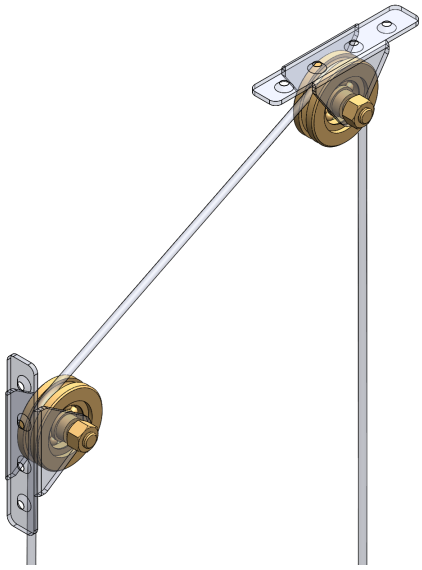

NIKO Part No.	X2.D60
Load Kg	130
Dimension B (mm)	22
Dimension D (mm)	58
Dimension M	M10
Dimension b (mm)	17
Dimension e (mm)	6

We reserve the right for technical amendments without obligation.
The product pictures and drawings depicted in this catalogue do not always reflect all available sizes.

Ver. December 2023

Steel bottom roller

Type X1.V59-V61

Steel bottom roller with brackets for angle guide rail (double bearing).

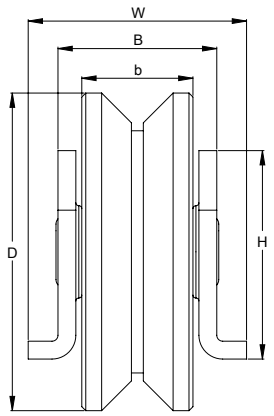

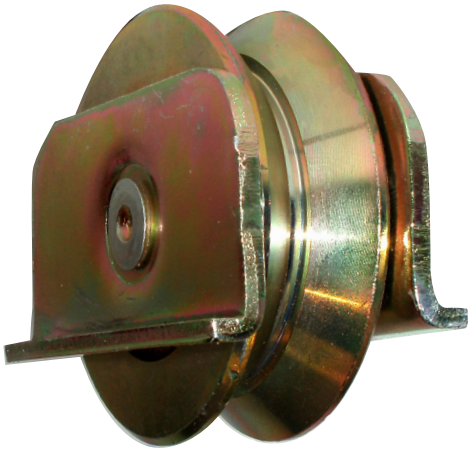

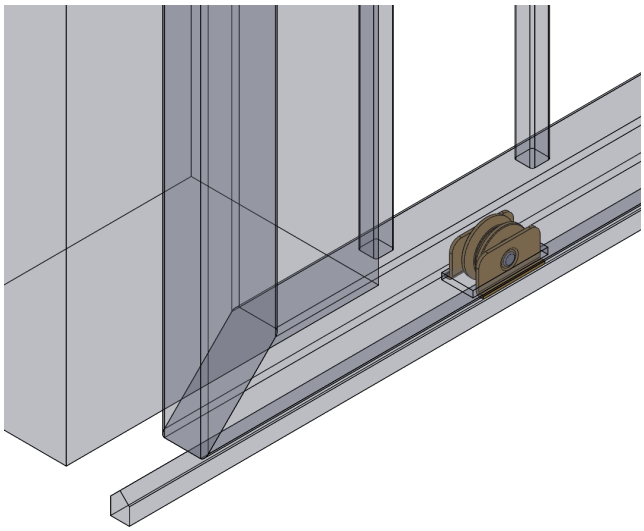

NIKO Part No.	X1.V59	X1.V61
Load Kg	160	250
Dimension B (mm)	28	40
Dimension D (mm)	48	60
Dimension H (mm)	34	52.5
Dimension b (mm)	20	28
Dimension W (mm)	38	50

Steel bottom roller

Type X1.S60-S61

Steel bottom roller with brackets for square guide rail (double bearing).

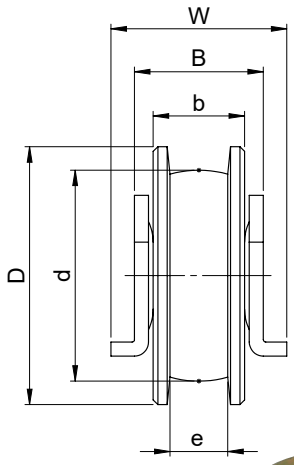

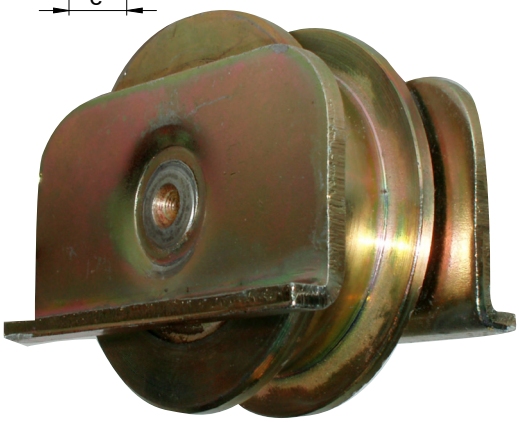

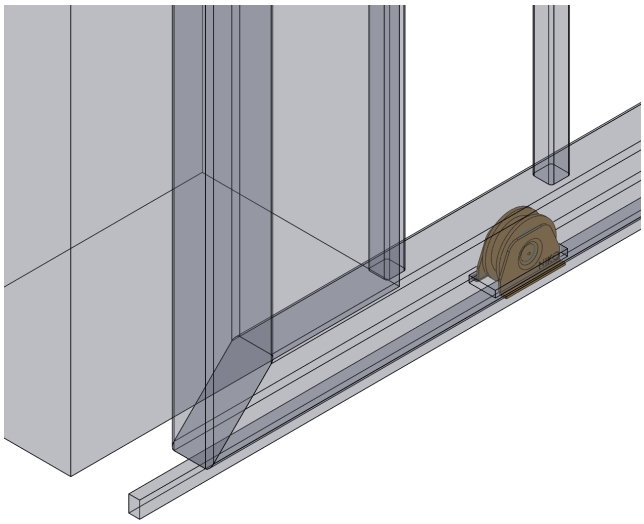

NIKO Part No.	X1.S60	X1.S61
Load Kg	160	250
Dimension B (mm)	28	28
Dimension D (mm)	45	55
Dimension b (mm)	20	19,5
Dimension d (mm)	35	45
Dimension e (mm)	10,2	12,3
Dimension W (mm)	38	38

We reserve the right for technical amendments without obligation.
The product pictures and drawings depicted in this catalogue do not always reflect all available sizes.

Steel bottom roller — Type X1.V79-V83

Steel bottom roller with axle for angle guide rail (double bearing).

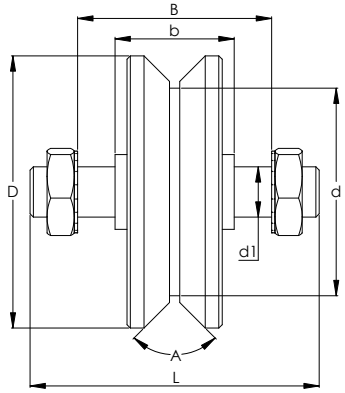

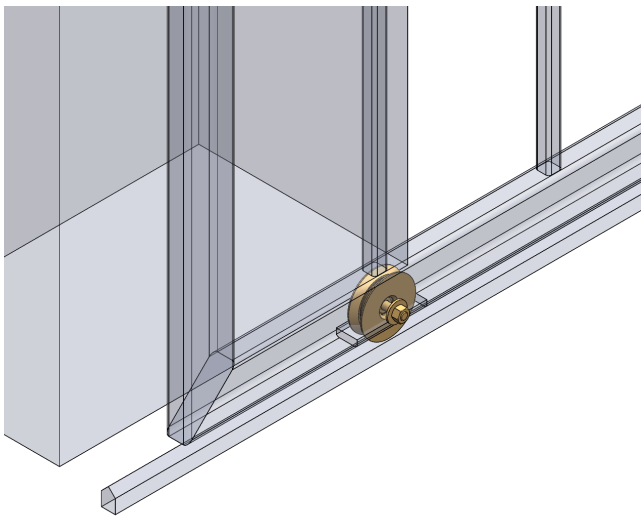

NIKO Part No.	X1.V79	X1.V81	X1.V82	X1.V83
Load Kg	160	250	375	500
Dimension B (mm)	32	39	-	-
Dimension D (mm)	48	60	80	100
Dimension L (mm)	50	59	53	59
Dimension A	92º	92º	92º	92º
Dimension b (mm)	21	24	33	40
Dimension d (mm)	33	44	61	81
Dimension d1	M10	M12	Ø15	Ø20

Steel bottom roller — Type X1.S80-S86

Steel bottom roller with axle for square guide rail (double bearing).

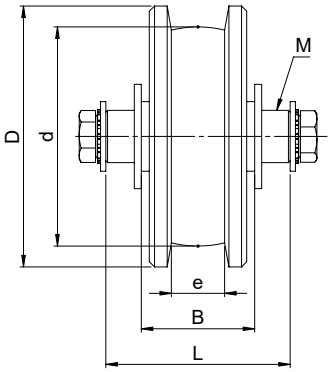

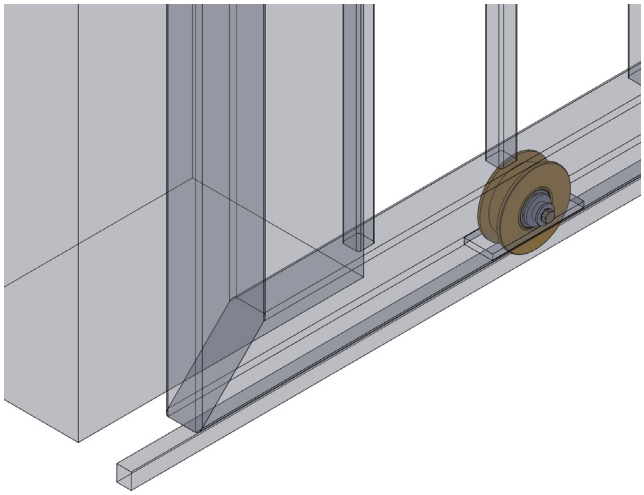

NIKO Part No.	X1.S80	X1.S81	X1.S82	X1.S83	X1.S84	X1.S85	X1.S86
Load Kg	160	250	375	500	650	1000	1500
Dimension B (mm)	21	24	33	40	46	58	70
Dimension D (mm)	45	55	75	100	125	160	200
Dimension L (mm)	50	59	53	59	69	87	108
Dimension M	M10	M12	Ø15	Ø20	Ø25	Ø30	Ø35
Dimension b (mm)	32	39	-	-	-	-	-
Dimension d (mm)	35	45	63	84	100	130	164
Dimension e (mm)	10,2	12,3	15,3	20,3	25,3	32	38

We reserve the right for technical amendments without obligation. The product pictures and drawings depicted in this catalogue do not always reflect all available sizes.

Steel bottom roller

Type X1.V51

Steel bottom roller with base for angle guide rail (double bearing).

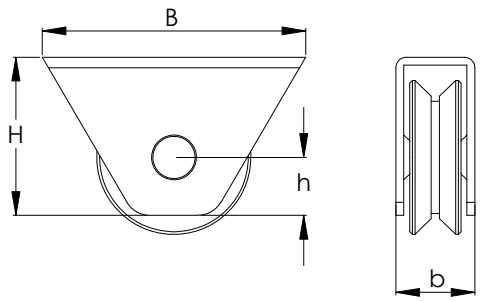

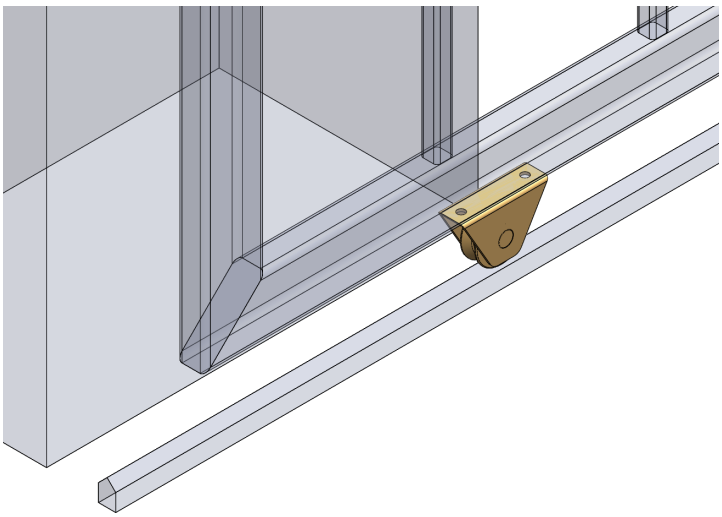

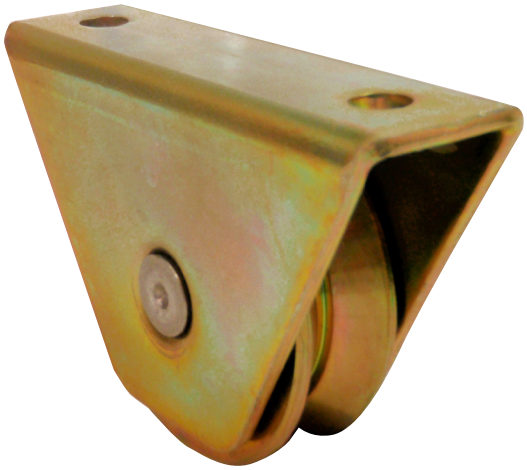

NIKO Part No.	X1.V51
Load Kg	250
Dimension B (mm)	100
Dimension H (mm)	59
Dimension b (mm)	28
Dimension h (mm)	22

Steel bottom roller

Type X1.S51

Steel bottom roller with base for square guide rail (double bearing).

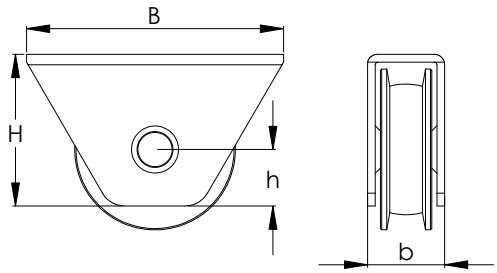

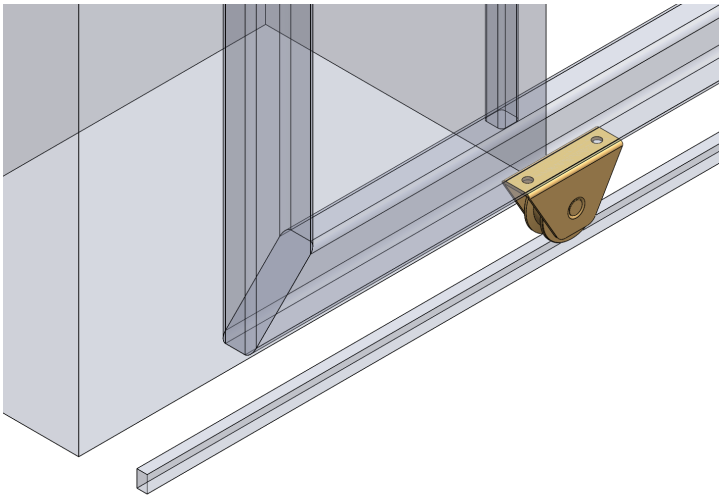

NIKO Part No.	X1.S51
Load Kg	250
Dimension B (mm)	100
Dimension H (mm)	59
Dimension b (mm)	28
Dimension h (mm)	22

We reserve the right for technical amendments without obligation.
The product pictures and drawings depicted in this catalogue do not always reflect all available sizes.

Steel bottom roller — Type X1.V71-V73

Steel bottom roller with side plates for angle guide rail (double bearing).

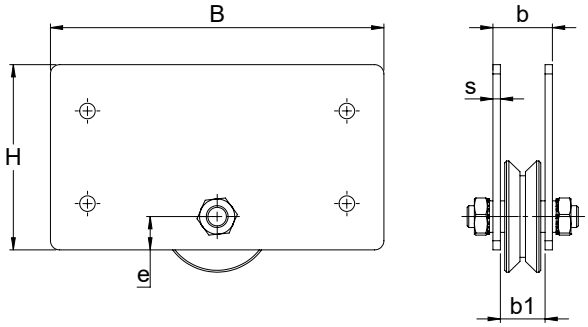

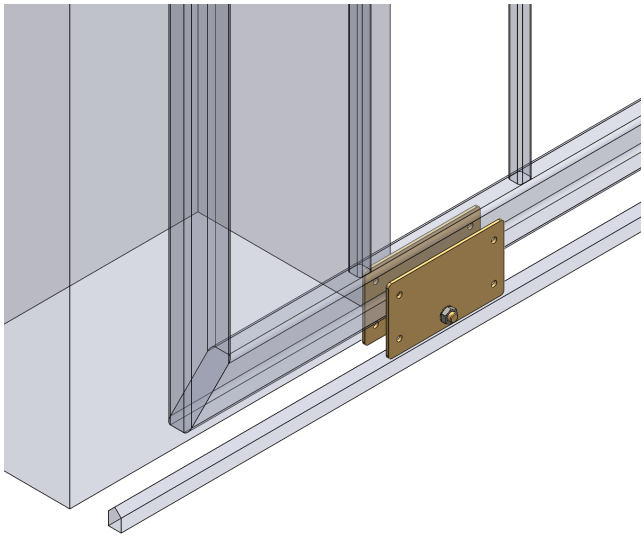

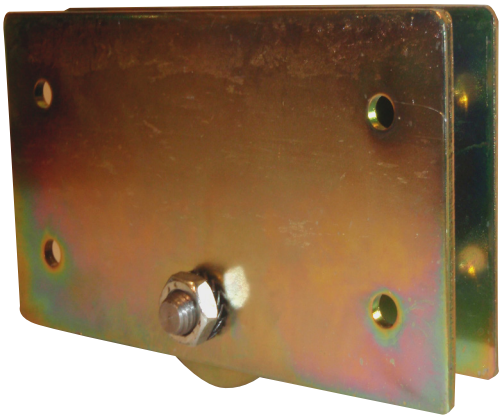

NIKO Part No.	X1.V71	X1.V72	X1.V73
Load Kg	250	375	500
Dimension b (mm)	32	41	50
Dimension H (mm)	100	100	120
Dimension B (mm)	180	180	210
Dimension b1 (mm)	24	33	40
Dimension e (mm)	18	25	35
Dimension s (mm)	4	4	5

Steel bottom roller — Type X1.S71-S74

Steel bottom roller with side plates for square guide rail (double bearing).

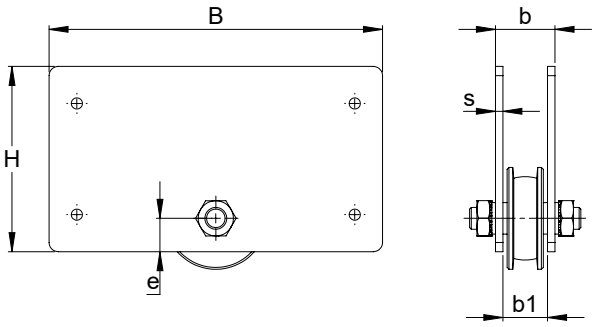

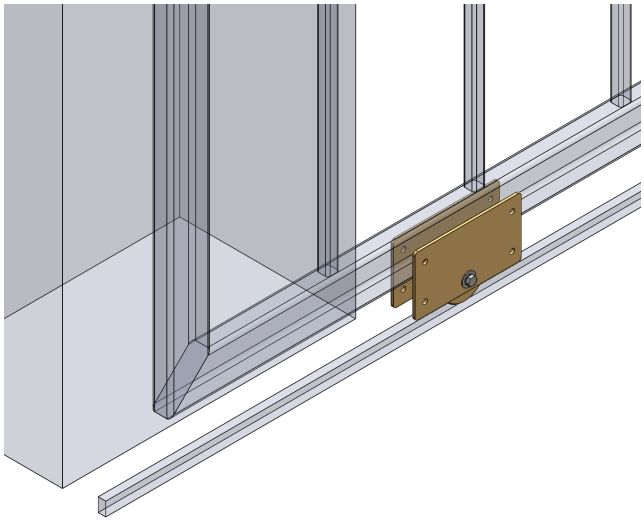

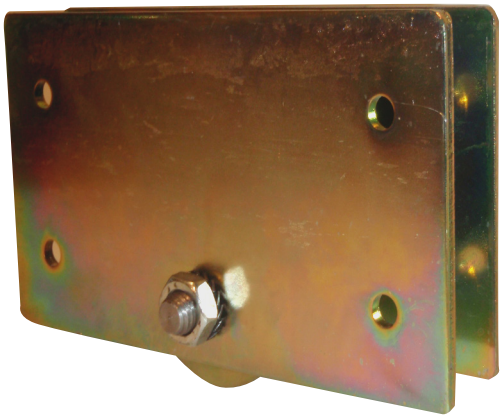

NIKO Part No.	X1.S71	X1.S72	X1.S73	X1.S74
Load Kg	250	375	500	750
Dimension B (mm)	180	180	210	210
Dimension H (mm)	100	100	120	120
Dimension b (mm)	32	41	50	56
Dimension b1 (mm)	24	33	40	46
Dimension e (mm)	18	25	35	42
Dimension s (mm)	4	4	5	5

We reserve the right for technical amendments without obligation.
The product pictures and drawings depicted in this catalogue do not always reflect all available sizes.

Trolley for cantilever gates, with 8 wheels — Type .X002

Minimal tilting effect through precise wheel guidance. High load capacity for professional applications for intensive operation. Stainless steel 304/A2.

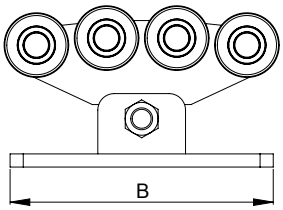

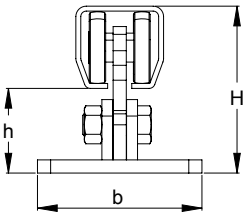

STAINLESS STEEL 304

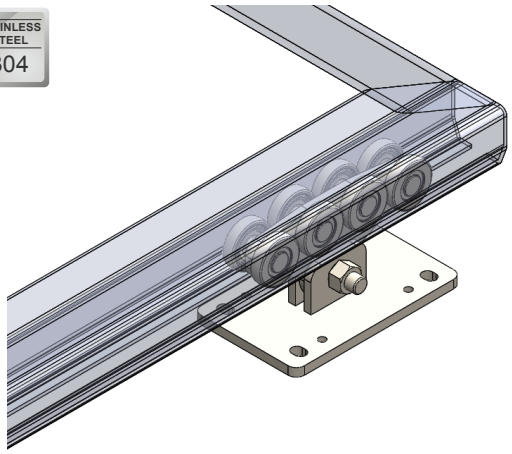

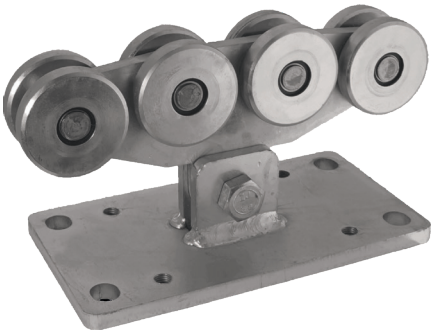

NIKO Profile No.	25.050
Part No. (304/A2)	55.X002
Dimension B (mm)	170
Dimension H (mm)	144
Dimension b (mm)	110
Dimension h (mm)	84

Base plate for height adjustment of trolley for cantilever gates — Type .X093

Stainless steel 304/A2, including 4 adjustment screws.

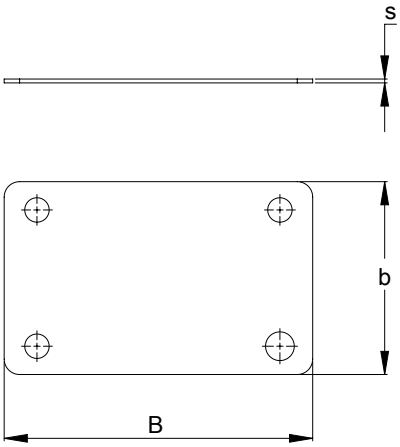

STAINLESS STEEL 304

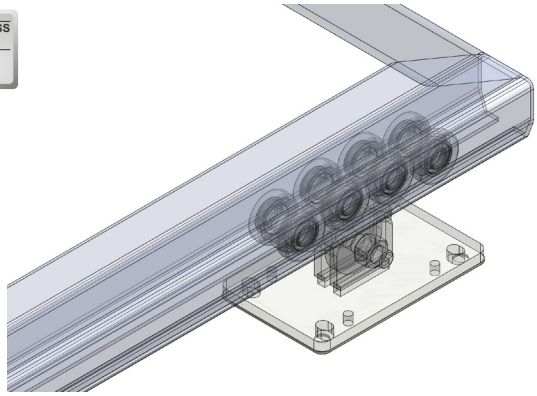

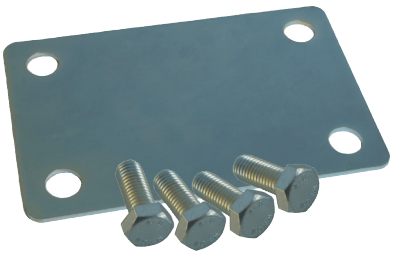

NIKO Profile No.	25.050
Part No. (304/A2)	55.X093
Dimension B (mm)	170
Dimension b (mm)	110
Dimension s (mm)	3

We reserve the right for technical amendments without obligation. The product pictures and drawings depicted in this catalogue do not always reflect all available sizes.

Adjustable support for resting base — Type .X092

For resting base type .X081 suitable for mounting on column or ground, including plate for height regulation and four screws. Stainless steel 304/A2.

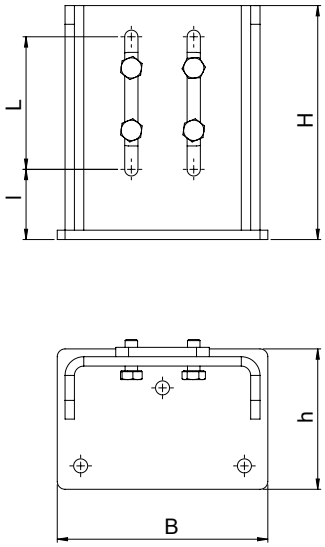

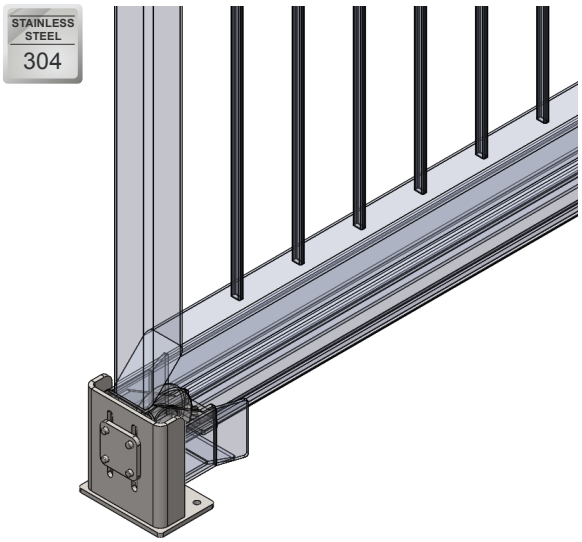

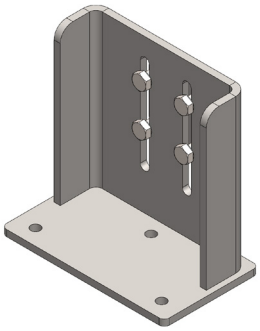

NIKO Profile No.	25.050
Part No.	55.X092
Dimension B (mm)	110
Dimension H (mm)	140
Dimension L (mm)	85
Dimension h (mm)	85
Dimension l (mm)	35

Guide fork — Type .X095

For upper entry guidance with nylon rollers d=50mm. Stainless steel 304/A2.

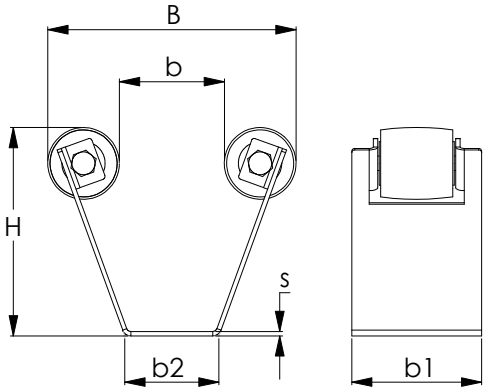

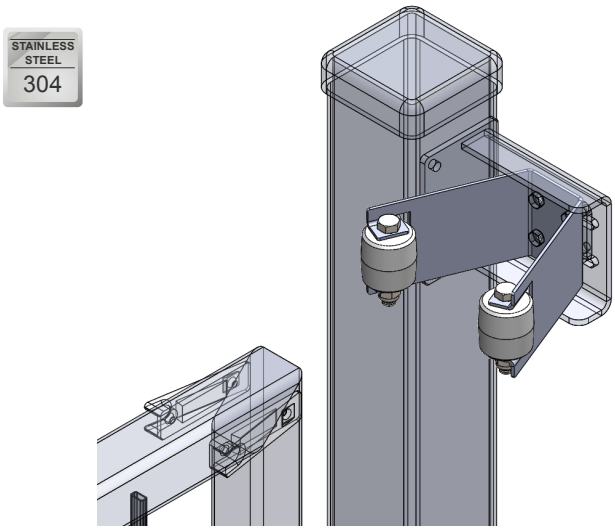

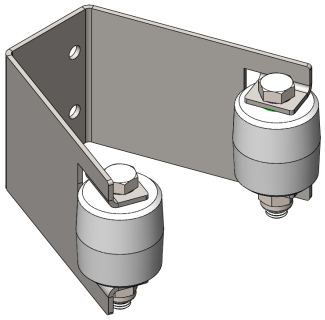

NIKO Profile No.	25.050
Part No.	55.X095
Dimension B (mm)	170
Dimension H (mm)	145
Dimension D (mm)	8,5
Dimension e (mm)	40
Dimension b (mm)	72,5
Dimension b1 (mm)	90
Dimension b2 (mm)	61
Dimension s (mm)	3

We reserve the right for technical amendments without obligation. The product pictures and drawings depicted in this catalogue do not always reflect all available sizes.

Trolley for cantilever gates, with 4 wheels & horizontal wheel — Type .X012

Adjustable tilting effect by adjustable support plate. Optimal loading capacity for residential use.
Stainless steel 304/A2.

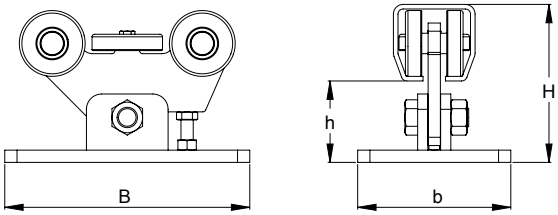

STAINLESS STEEL 304

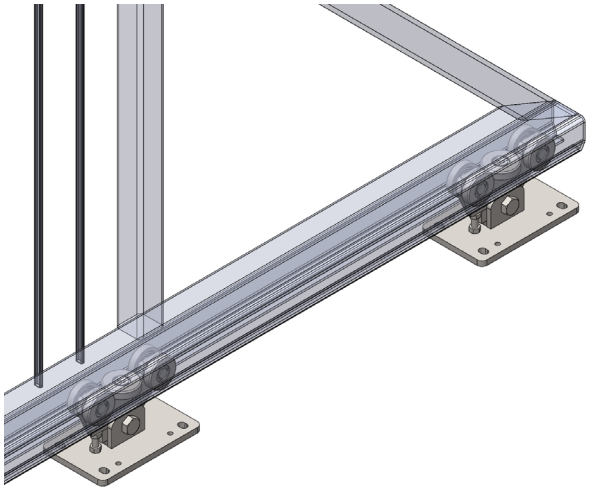

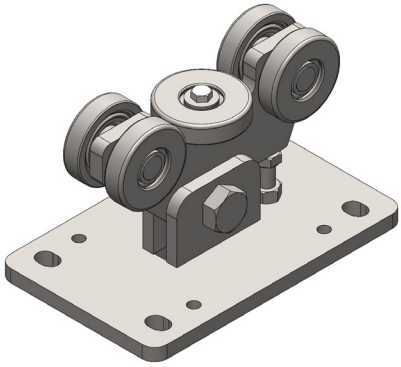

NIKO Profile No.	25.050
Part No.	55.X012
Dimension B (mm)	170
Dimension H (mm)	122
Dimension b (mm)	110
Dimension h (mm)	62

Top guide — Type .X094

Top guide with two or four plastic rollers for adjustment. Stainless steel 304/A2.

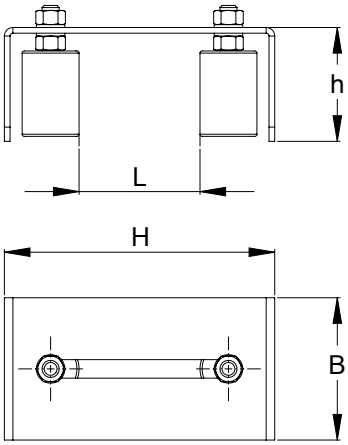

STAINLESS STEEL 304

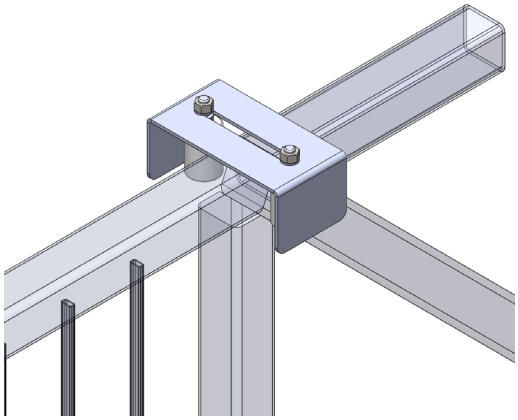

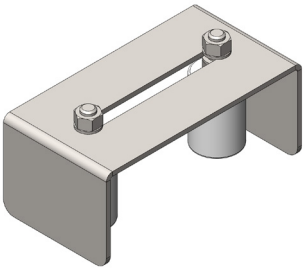

NIKO Profile No.	25.050
Part No.	55.X094
Dimension B (mm)	100
Dimension H (mm)	190
Dimension L (mm)	min 45 - max 85
Dimension h (mm)	80

We reserve the right for technical amendments without obligation.
The product pictures and drawings depicted in this catalogue do not always reflect all available sizes.

Resting base

Type .X081

For cantilever gates including buffer stop. Stainless steel 304/A2.

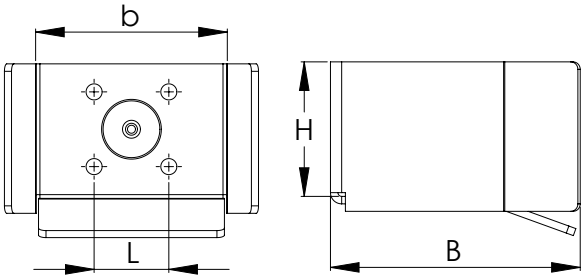

STAINLESS STEEL 304

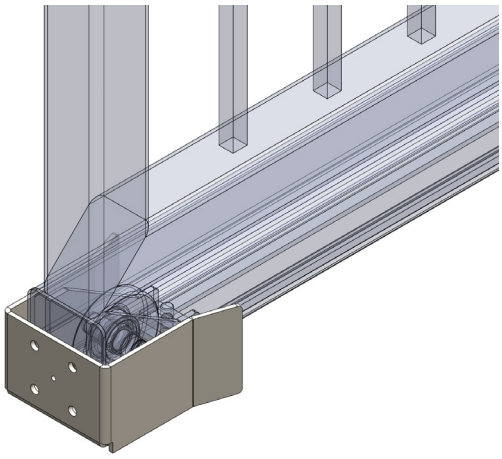

NIKO Profile No.	25.050
Part No.	55.X081
Dimension B (mm)	112
Dimension H (mm)	72
Dimension L (mm)	40
Dimension b (mm)	81

Guide roller for cantilever gates with plate

Type .X091

Guide roller with end cap for coating. Stainless steel 304/A2.

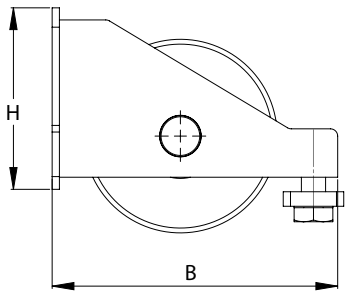

STAINLESS STEEL 304

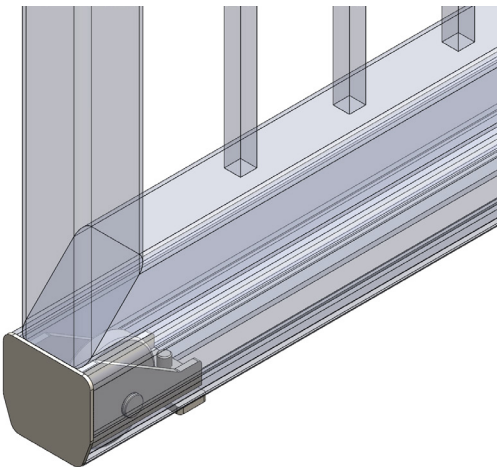

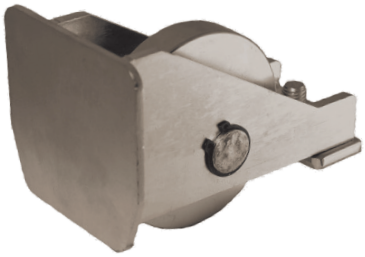

NIKO Profile No.	25.050
Part No.	55.X091
Dimension B (mm)	100
Dimension H (mm)	60

We reserve the right for technical amendments without obligation. The product pictures and drawings depicted in this catalogue do not always reflect all available sizes.

Ver. December 2023

Guide roller with screw

Type .X69

For overlapping guidance with screw connection in stainless steel 304/A2 (delivery without trackpiece).

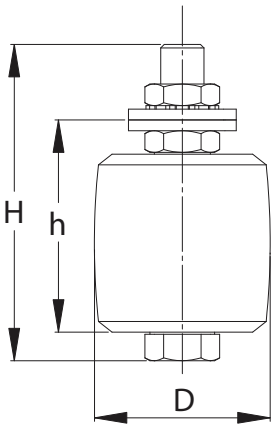

STAINLESS STEEL 304

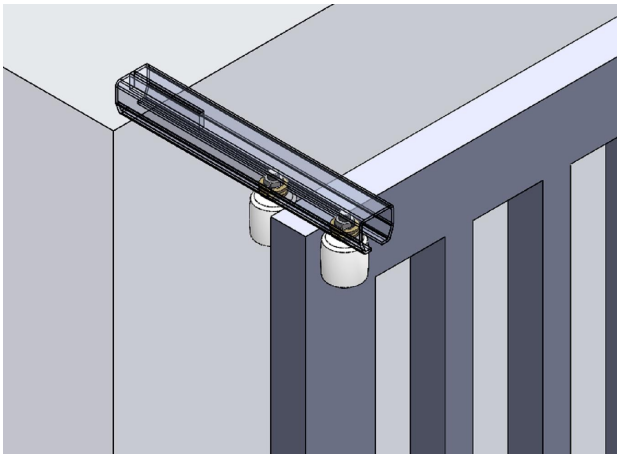

NIKO Part No.	IN.38.X69
Dimension H (mm)	88
Dimension D (mm)	50
Dimension h (mm)	58

Guide with nylon or brass roller with screw

Type .N49/.M49

For concealed guidance with screw connection in stainless steel 304/A2.

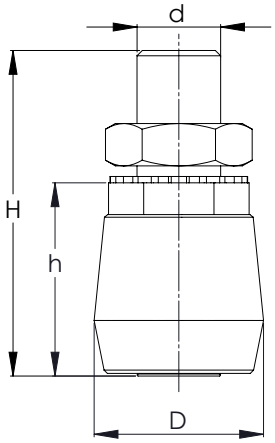

STAINLESS STEEL 304

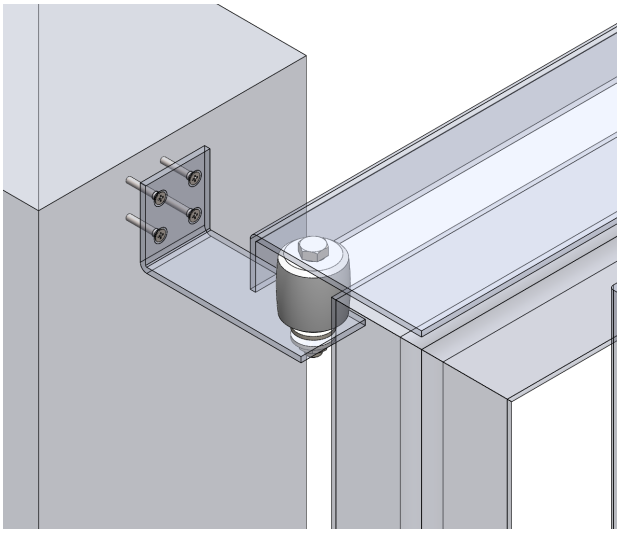

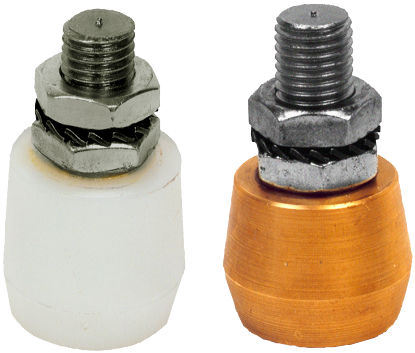

NIKO Profile No.	33.000	34.000	35.000
Part No. NYLON	IN.33.N49	IN.34.N49	IN.35.N49
Part No. BRASS	IN.33.M49	IN.34.M49	IN.35.M49
Dimension H (mm)	46	56	80
Dimension D (mm)	19	32	50
Dimension h (mm)	26	36	50
Dimension d	M10	M12	M20

We reserve the right for technical amendments without obligation. The product pictures and drawings depicted in this catalogue do not always reflect all available sizes.

Technical instructions for cantilever gate building

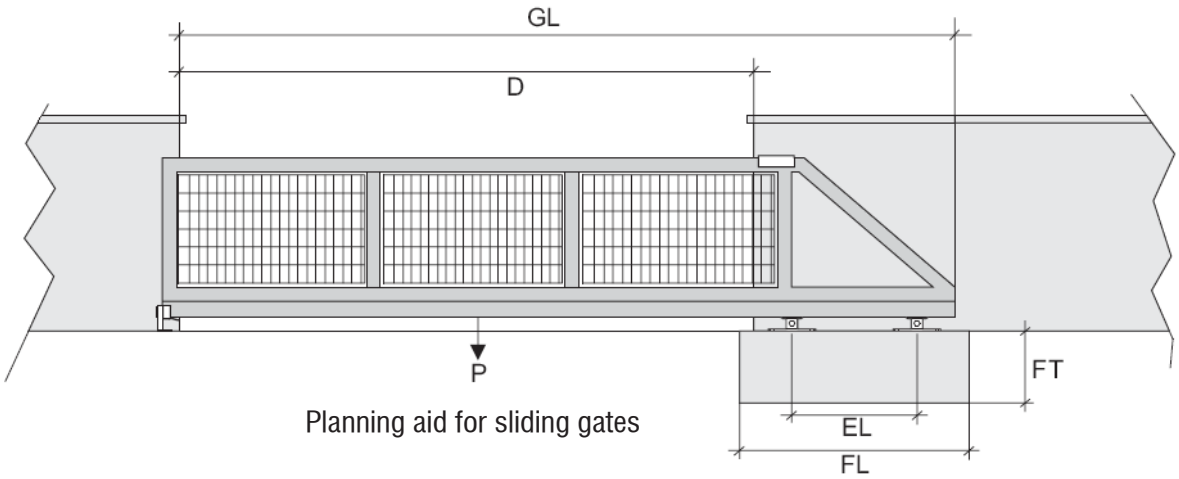

Planning aid for sliding gates

Measurements for gate building:
These measurements are to be maintained at the least. The gate weights refer to the total weight inclusive track profile and gate frame. The weights of the fillings are to be adapted to the max.gate weights. At other design of the structure parts the static strength of the gate system must be recalculated. As calculation base an air permeability of the gate area of 50% has been used.

Profile	25.000				26.000				27.000					
Clearance D	2500	3000	3500	4000	4500	5000	5500	6000	6500	7000	7500	8000	8500	9000
max. Gate weight P kg	300	300	300	300	600	600	600	600	900	900	900	900	900	900
Frame aluminium	60/40/3	60/40/3	70/50/3	70/50/3	70/50/3	70/50/3	70/50/4	70/50/4	80/60/4	80/60/4	100/60/4	100/60/4	100/80/4	100/80/4
Frame steel	60/30/3	60/30/3	60/40/3	60/40/3	70/50/3	70/50/3	70/50/3	70/50/3	100/80/3	100/80/3	100/80/3	100/80/4	100/80/4	100/80/4
EL mm	875	1050	1225	1400	1575	1750	1925	2100	2275	2450	2625	2800	2975	3150
Gl mm	3845	4520	5195	5870	6635	7310	7985	8660	9485	10160	10835	11510	12185	12860

Measurements for foundation
(Concrete quality C20-50, reinforced concrete, weight approx.: 2,25T/m³, without steel reinforcement).
The foundation must have a steel reinforcement, which has to be determined by a structural engineer.
These foundation dimensions are minimum measurements.

Profile	25.000				26.000				27.000					
Clearance D	2500	3000	3500	4000	4500	5000	5500	6000	6500	7000	7500	8000	8500	9000
Foundation length FL	1700	1920	2095	2270	2535	2710	2885	3060	3385	3560	3735	3910	4085	4260
Foundation depth FT	800	800	800	800	800	800	800	800	800	800	800	800	800	800
Foundation width	400	400	400	400	450	450	450	450	500	500	500	500	500	500
Foundation weight approx. kg	1224	1382	1508	1635	2053	2195	2336	2479	3051	3204	3366	3519	3681	3843

We reserve the right for technical amendments without obligation.
The product pictures and drawings depicted in this catalogue do not always reflect all available sizes.

For inside guidance on column for gates with facing

For outside guidance on wall for gates with filling

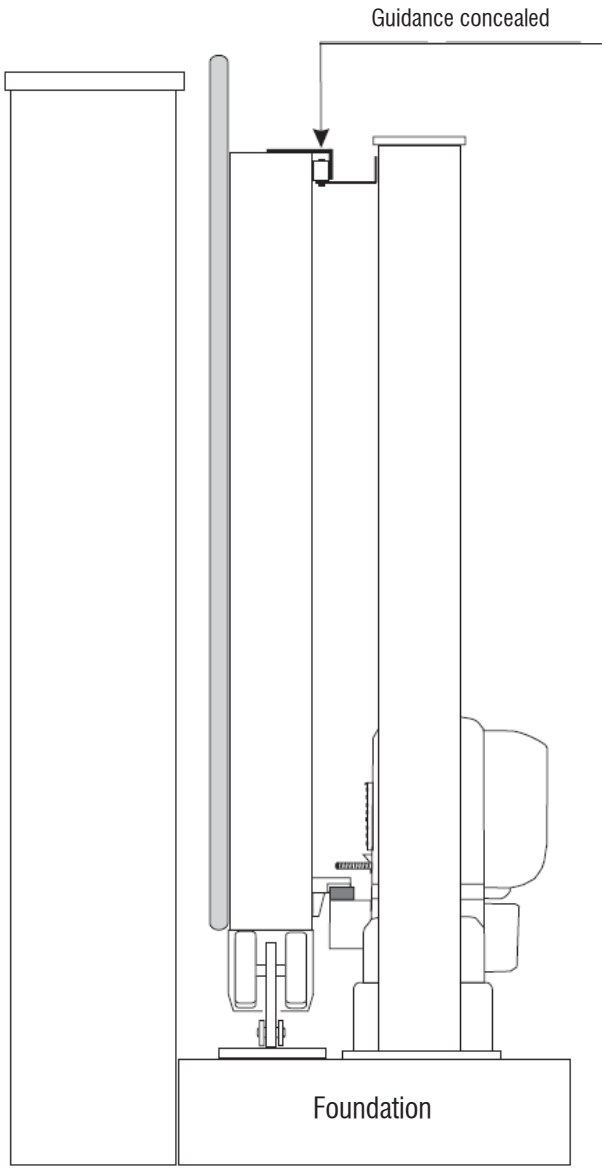

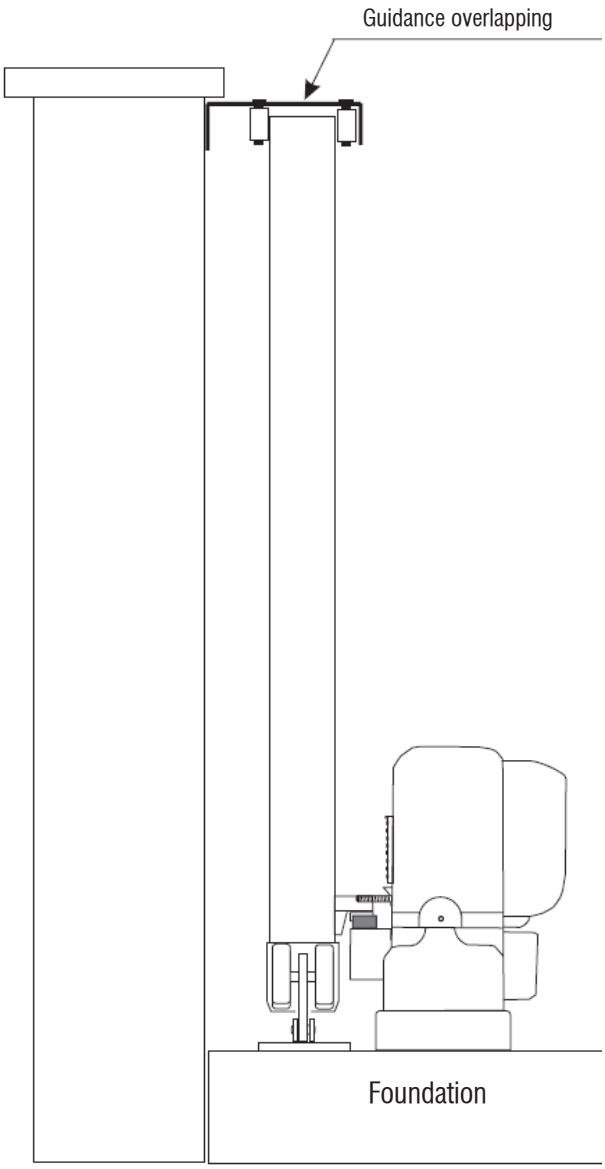

If the gate system is automated, a protective guard for the running rollers at the top guidance must be provided on site after the gate mounting/adjustment (see below).

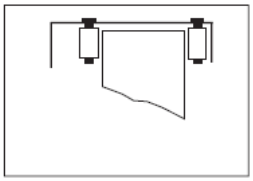

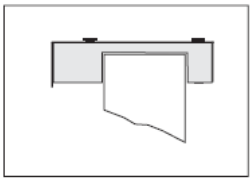

We reserve the right for technical amendments without obligation. The product pictures and drawings depicted in this catalogue do not always reflect all available sizes.

Index

Part No.	Page
25.000	11
25.050	11
26.000	11
27.000	11
25.X002	12
25.X012	12
25.X081	13
25.X091	14
25.X092	14
25.X093	13
25.X094	15
25.X095	15
26.X002	12
26.X012	12
26.X081	13
26.X091	14
26.X092	14
26.X093	13
26.X094	15
26.X095	15
27.X002	12
27.X081	13
27.X091	14
27.X092	14
27.X093	13
27.X094	15
27.X095	15
27.X095L	15
33.M49	18
33.N49	18
34.M49	18
34.N49	18
35.M49	18
35.N49	18
38.E18	18
38.E19	18
38.E20	18
38.E54	16
38.E55	16
38.X69	16
38.X70	17
38.X71	17
55.X002	39
55.X012	41

Part No.	Page
55.X081	42
55.X091	42
55.X092	40
55.X093	39
55.X094	41
55.X095	40
FTTR.160	21
FTTR.175	21
IN.33.M49	43
IN.33.N49	43
IN.34.M49	43
IN.34.N49	43
IN.35.M49	43
IN.35.N49	43
IN.38.X69	43
PTB.29	20
PTB.30	20
PTB.33	20
PTB.36	20
PTB.39	20
PTB.42	20
T.2035	19
T.2036	19
T.2037	19
T.2038	19
T.2039	19
T.2055	19
T.2057	19
T.2060	19
T.2062	19
T.2065	19
T.2067	19
T.2070	19
T.2072	19
T.2075	19
T.2077	19
TTR.08	19
TTR.10	19
TTR.12	19
TTR.14	19
TTR.16	19
X1.S42	34
X1.S43	34
X1.S44	34

Part No.	Page
X1.S45	34
X1.S51	37
X1.S60	35
X1.S61	35
X1.S71	38
X1.S72	38
X1.S73	38
X1.S74	38
X1.S80	36
X1.S81	36
X1.S82	36
X1.S83	36
X1.S84	36
X1.S85	36
X1.S86	36
X1.V51	37
X1.V59	35
X1.V61	35
X1.V71	38
X1.V72	38
X1.V73	38
X1.V79	36
X1.V81	36
X1.V82	36
X1.V83	36
X2.D60	34
X2.O60	33
X2.O61	31
X2.O80	33
X2.O81	31
X2.S101	32
X2.S60	33
X2.S61	32
X2.S80	33
X2.S81	32
X2.V100	32
X2.V101	31
X2.V121	31
X2.V60	32
X2.V61	31
X2.V80	32
X2.V81	31
X5.14KA	23
X5.14KB	23

Part No.	Page
X5.14KS	23
X5.14KW	23
X5.400	30
X5.401	30
X5.500	30
X5.510	22
X5.511	22
X5.TF16S	28
X5.TF16W	28
X5.BA1020	26
X5.BA1024	26
X5.BA1520	27
X5.BA2020	26
X5.BA3020	27
X5.BA4016	28
X5.BA50S	29
X5.BA50WI	29
X5.BA70S	29
X5.BA70W	29
X5.CA100	24
X5.CA200	25
X5.L29	20
X5.L30	20
X5.L33	20
X5.L36	20
X5.L39	20
X5.L42	20
X5.PL.1010N	24
X5.PL.1010R	24
X5.PL0610N	24
X5.PL0610R	24
X5.PL0821N	25
X5.PL0821R	25
X5.S25	21
X5.S30	21

We reserve the right for technical amendments without obligation.
The product pictures and drawings depicted in this catalogue do not always reflect all available sizes.

Ver. December 2023

Our quality control department is manned with experienced and highly skilled engineers. Our test lab is equipped with endurance test stands, tensile stress equipment, hardness test machines and other laboratory equipment. Virtual stress analysis is also performed during the developing phase of every component.

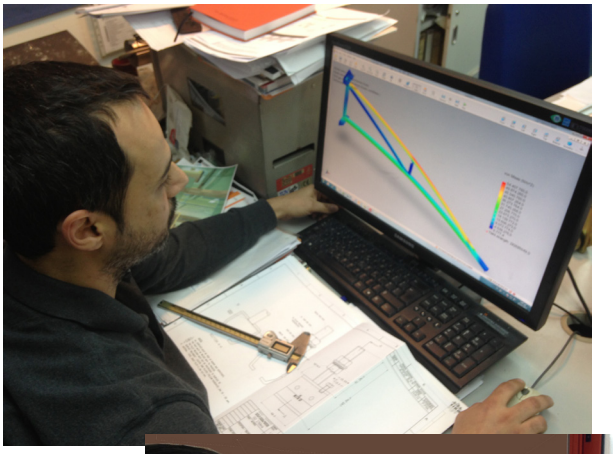

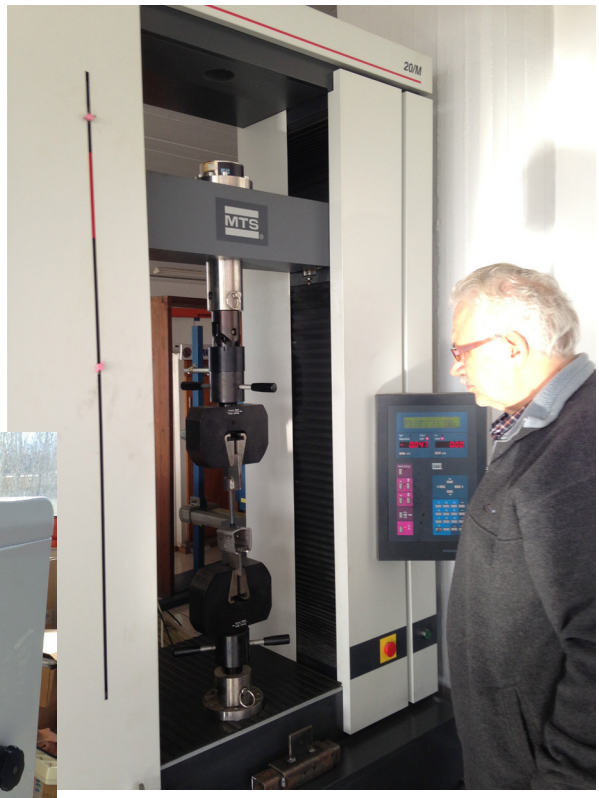

CERTIFICATE

eqa
quality for leaders

The Certification & Inspection Body EQA HELLAS S.A. certifies that

HELM HELLAS S.A.

82nd km N.R. ATHENS - KORINTHOS, GR 201 00 KORINTHOS

has established and applies a Quality Management System which is in conformance with:

ΕΛΟΤ EN ISO 9001:2015
(Quality Management System)

with the scope:

MANUFACTURING OF SLIDING DOOR FITTINGS & CONVEYOR SYSTEMS

Certificate Number:
QMS 3363/22

Date of Certification/ Certification Decision:
08 November 2021

Expiry Date:
08 November 2024

Initial Certification Date:
12 November 2009

FOR THE COMPANY
CHARALAMPOS GALATSANOS

IAF
ESYD
MS Certification
No of Certificate 82

EQA HELLAS S.A.
Potamou Kalama 30, Chalandri 152 33 www.eqa.gr
+30 210 68 34 012 | Fax: +30 210 68 50 985 eqa@eqa.gr | info@eqa.gr
This Certificate of Conformity is valid subject to the required annual surveillance audits - 1st surveillance within 12 months from the initial certification decision date and 2nd surveillance within 24 months from the initial certification decision date – and it is subject to the applicable accreditation and EQA HELLAS S.A. rules and regulations.
F05-06.2, Ev.3.0, 05/08/2021

LETRINA S.A.
CERTIFICATION BODY

ΠΙΣΤΟΠΟΙΗΤΙΚΟ - CERTIFICATE

Certificate Holder: **HELM HELLAS S.A.**
82nd klm NATIONAL ROAD ATHENS - KORINTHOS, GR 201 00 KORINTHOS, GREECE

Scope: **DESIGN, PRODUCTION OF SLIDING DOOR FITTINGS AND CONVEYOR SYSTEMS**

Standard: **ISO 14001:2015**

The Certification Body **LETRINA S.A.** certifies that the Environmental Management System of the above company has been assessed and found to conform with the requirements of the aforementioned standard

Certificate No: **18241937 - E**

Issued on: 16/01/2018
Re issued on: 30/11/2020
Valid until: 15/01/2024

ESYD
MS Certification
No of Certificate 12 - 6

LETRINA S.A.

I. Bertsatos
Managing Director

21, Egialias & 1, Halepa Str, GR 151 25 Paradisos Amarousiou, Athens, Greece
T: 210 68 48 190 F: 210 68 49 700 URL: www.letrina.gr e-mail: certification@letrina.gr
REV.10

We reserve the right for technical amendments without obligation.
The product pictures and drawings depicted in this catalogue do not always reflect all available sizes.

AUSTRIA-
NIKO Vertriebs GmbH
Hainfelder Straße 48
A – 2560 Berndorf
Tel. 0043 (0) 2672 21201
Fax 0043 (0) 2672-21201-13
office.at@niko.eu.com
www.niko.world

POLAND-
NIKO Polska
Skrzynno 192a
Ostrowek 98-311
Tel. +48 504 003 556
info.pl@niko.eu.com
www.niko.world

GREECE-
Helm Hellas S.A.
82nd Km Athens-Korinthos
P.O. Box 209
GR - 201 00 KORINTHOS
Tel. 0030 27410 76800
Fax 0030 27410 25368
info@niko.eu.com
www.niko.eu.com

NIKO Conveyors
597 Middle Street
Bristol, CT 06010
Tel. 001 860-845-8179
info@NIKOconveyors.com
www.nikoconveyors.com

NikoTrack/NIKO US
9 Stockholm St,
Newport RI 02840
C: 401-835-8640
Alex.Koza@niko.eu.com
alex@nikotrack.com
www.nikotrack.com

CANADA -
NIKO Crane Canada
615, rue du Nickel
Québec (Québec) G2N 0J9
Tel. 418 841.2287
info@smakdesign.ca
www.smakmanutention.com

UNITED KINGDOM-
NIKO Ltd
Airfield Park Business Park
Welsh Road East, Southam
Warwickshire, CV47 1NE
Tel. 0044 (0) 1926 813111
Fax 0044 (0) 1926 815599
Sales@niko.co.uk
www.niko.co.uk

USA Light Crane Systems-
NIKORAIL
8000 Joliet Rd.
McCook, IL 60525
Toll Free 888.352.1213
Tel. 001 708-352-1213
sales@hsicrane.com
www.nikorail.com

GERMANY-
NIKO Technik GmbH
Robert-Bosch-Str. 14
DE – 42489 Wülfrath
Tel. 0049 (0) 2058 9093603
Fax 0049 (0) 2058 9093604
office.de@niko.eu.com
www.niko.world

CHINA-
NIKO TRADING (SHANGHAI) Co., Ltd
Room 901-156, No.18
Tianshan Road, Changning District,
P.R.China - 201802 Shanghai
Tel. 0086 134 2785 9785
info.cn@niko.eu.com

Copyright NIKO (Version December 2023)
We take no obligation for layout, composition, technical modifications as well as misprints.
Subject to technical modifications / Images can be differ from original.

www.niko.eu.com

Your **NIKO** agent will be happy to advise you:

Complete product range **NIKO**:

- Light duty sliding door hardware
- Heavy duty sliding door hardware
- Conveyor systems
- Light cranes
- Cable trolleys, festoon systems & conductor bars
- Personal fall arrest systems (EN 795)
- Accessories for gates and doors